# DATASHEET - TM-5-8281/EZ



**Step switches, Contacts: 9, 10 A, front plate: 0-3, 45 °, 3 steps, 45°, maintained, centre mounting**

**Part no.** TM-5-8281/EZ
**Catalog No.** 046125

Powering Business Worldwide™

## Delivery program

| | | | |
|---|---|---|---|
| Product range | | | Control switches |
| Part group reference | | | TM |
| Basic function | | | Step switches |
| | | | with black thumb grip and front plate |
| Contacts | | | 9 |
| Number of steps | | | 3 steps, 45° |
| Degree of Protection | | | Front IP65 |
| Design | | | centre mounting |
| | | | 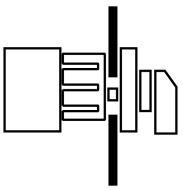 |
| Contact sequence | | | 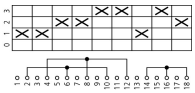 |
| Switching angle | | ° | 45 |
| Switching performance | | | maintained<br>With 0 (Off) position |
| Design number | | | 8281 |
| Front plate no. | | | 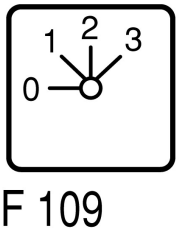<br>F 109 |
| front plate | | | 0-3 |
| **Motor rating AC-23A, 50 - 60 Hz** | | | |
| 400 V | P | kW | 3 |
| Rated uninterrupted current | $I_u$ | A | 10 |
| Note on rated uninterrupted current $!_u$ | | | Rated uninterrupted current $I_u$ is specified for max. cross-section. |
| Number of contact units | | contact unit(s) | 5 |

## Technical data

### General

| | | | |
|---|---|---|---|
| Standards | | | IEC/EN 60947, VDE 0660, CSA, UL<br>Control switch as per IEC/EN 60947-5-1<br>Auxiliary switch as per IEC/EN 60947-5-1 |
| Climatic proofing | | | Damp heat, constant, to IEC 60068-2-78<br>Damp heat, cyclic, to IEC 60068-2-30 |
| Ambient temperature | | | |
| Open | | °C | -25 - +50 |
| Overvoltage category/pollution degree | | | III/3 |
| Rated impulse withstand voltage | $U_{imp}$ | V AC | 4000 |
| Mounting position | | | As required |

## Contacts

| | | | |
|---|---|---|---|
| Electrical characteristics | | | |
| Rated operational voltage | $U_e$ | V AC | 500 |
| Rated uninterrupted current | $I_u$ | A | 10 |
| Note on rated uninterrupted current $I_u$ | | | Rated uninterrupted current $I_u$ is specified for max. cross-section. |
| Short-circuit rating | | | |
| Fuse | | A gG/gL | 10 |

## Switching capacity

| | | | |
|---|---|---|---|
| Safe isolation to EN 61140 | | | |
| Current heat loss per contact at $I_e$ | | W | 0.15 |
| Current heat loss per auxiliary circuit at $I_e$ (AC-15/230 V) | | CO | 0.15 |
| Lifespan, mechanical | Operations | x $10^6$ | > 1 |
| Maximum operating frequency | Operations/h | | 1200 |
| AC | | | |
| AC-23A | | | |
| Motor rating AC-23A, 50 - 60 Hz | P | kW | |
| 400 V 415 V | P | kW | 3 |
| Control circuit reliability at 24 V DC, 10 mA | Fault probability | $H_F$ | < $10^{-5}$, < 1 fault in 100000 operations |

## Terminal capacities

| | | | |
|---|---|---|---|
| Solid or stranded | | $mm^2$ | 1 x 1,5<br>2 x 1,5 |
| Flexible with ferrules to DIN 46228 | | $mm^2$ | 1 x 1.0<br>2 x 1.0 |
| Flexible | | $mm^2$ | 1 x 1.5<br>2 x 1.5 |
| Terminal screw | | | M2.5 |
| Tightening torque for terminal screw | | Nm | 0.4 |

## Rating data for approved types

| | | | |
|---|---|---|---|
| Contacts | | | |
| Rated operational voltage | $U_e$ | V AC | 300 |
| Rated uninterrupted current max. | | | |
| Main conducting paths | | | |
| General use | | A | 10 |
| Auxiliary contacts | | | |
| General Use | $I_U$ | A | 10 |
| Pilot Duty | | | A 300 |
| Switching capacity | | | |
| Maximum motor rating | | | |
| Single-phase | | | |
| 120 V AC | | HP | 0.33 |
| 240 V AC | | HP | 0.75 |
| 277 V AC | | HP | 0.75 |
| Three-phase | | | |
| 120 V AC | | HP | 0.75 |
| 240 V AC | | HP | 1 |
| Terminal capacity | | | |
| Solid or flexible conductor with ferrule | | AWG | 14 |
| Terminal screw | | | M2.5 |
| Tightening torque | | lb-in | 3.5 |

# Design verification as per IEC/EN 61439

| | | | |
|---|---|---|---|
| Technical data for design verification | | | |
| Rated operational current for specified heat dissipation | $I_n$ | A | 10 |
| Heat dissipation per pole, current-dependent | $P_{vid}$ | W | 0.15 |
| Equipment heat dissipation, current-dependent | $P_{vid}$ | W | 0 |
| Static heat dissipation, non-current-dependent | $P_{vs}$ | W | 0 |

| | | | |
|---|---|---|---|
| Heat dissipation capacity | $P_{diss}$ | W | 0 |
| Operating ambient temperature min. | | °C | -25 |
| Operating ambient temperature max. | | °C | 50 |
| IEC/EN 61439 design verification | | | |
| 10.2 Strength of materials and parts | | | |
| 10.2.2 Corrosion resistance | | | Meets the product standard's requirements. |
| 10.2.3.1 Verification of thermal stability of enclosures | | | Meets the product standard's requirements. |
| 10.2.3.2 Verification of resistance of insulating materials to normal heat | | | Meets the product standard's requirements. |
| 10.2.3.3 Verification of resistance of insulating materials to abnormal heat and fire due to internal electric effects | | | Meets the product standard's requirements. |
| 10.2.4 Resistance to ultra-violet (UV) radiation | | | UV resistance only in connection with protective shield. |
| 10.2.5 Lifting | | | Does not apply, since the entire switchgear needs to be evaluated. |
| 10.2.6 Mechanical impact | | | Does not apply, since the entire switchgear needs to be evaluated. |
| 10.2.7 Inscriptions | | | Meets the product standard's requirements. |
| 10.3 Degree of protection of ASSEMBLIES | | | Does not apply, since the entire switchgear needs to be evaluated. |
| 10.4 Clearances and creepage distances | | | Meets the product standard's requirements. |
| 10.5 Protection against electric shock | | | Does not apply, since the entire switchgear needs to be evaluated. |
| 10.6 Incorporation of switching devices and components | | | Does not apply, since the entire switchgear needs to be evaluated. |
| 10.7 Internal electrical circuits and connections | | | Is the panel builder's responsibility. |
| 10.8 Connections for external conductors | | | Is the panel builder's responsibility. |
| 10.9 Insulation properties | | | |
| 10.9.2 Power-frequency electric strength | | | Is the panel builder's responsibility. |
| 10.9.3 Impulse withstand voltage | | | Is the panel builder's responsibility. |
| 10.9.4 Testing of enclosures made of insulating material | | | Is the panel builder's responsibility. |
| 10.10 Temperature rise | | | The panel builder is responsible for the temperature rise calculation. Eaton will provide heat dissipation data for the devices. |
| 10.11 Short-circuit rating | | | Is the panel builder's responsibility. The specifications for the switchgear must be observed. |
| 10.12 Electromagnetic compatibility | | | Is the panel builder's responsibility. The specifications for the switchgear must be observed. |
| 10.13 Mechanical function | | | The device meets the requirements, provided the information in the instruction leaflet (IL) is observed. |

## Technical data ETIM 7.0

| | | | |
|---|---|---|---|
| Low-voltage industrial components (EG000017) / Control switch (EC002611) | | | |
| Electric engineering, automation, process control engineering / Low-voltage switch technology / Off-load switch, circuit breaker, control switch / Control switch (ecl@ss10.0.1-27-37-14-14 [ACN998011]) | | | |
| Type of switch | | | Level switch |
| Number of poles | | | 3 |
| Max. rated operation voltage Ue AC | | V | 500 |
| Rated permanent current Iu | | A | 10 |
| Number of switch positions | | | 4 |
| With 0 (off) position | | | Yes |
| With retraction in 0-position | | | No |
| Device construction | | | Built-in device |
| Width in number of modular spacings | | | 0 |
| Suitable for ground mounting | | | No |
| Suitable for front mounting 4-hole | | | Yes |
| Suitable for distribution board installation | | | No |
| Suitable for intermediate mounting | | | No |
| Complete device in housing | | | No |
| Type of control element | | | Toggle |
| Front shield size | | | 30x30 mm |
| Degree of protection (IP), front side | | | IP65 |
| Degree of protection (NEMA), front side | | | Other |

## Approvals

| | | | |
|---|---|---|---|
| Product Standards | | | UL 508; CSA-C22.2 No. 14-05; CSA-C22.2 No. 94; IEC/EN 60947-3; CE marking |

| | | |
|---|---|---|
| UL File No. | | E36332 |
| UL Category Control No. | | NLRV |
| CSA File No. | | UL report applies to both US and Canada |
| North America Certification | | UL listed, certified by UL for use in Canada |
| Degree of Protection | | IEC: IP65; UL/CSA Type: – |

## Dimensions

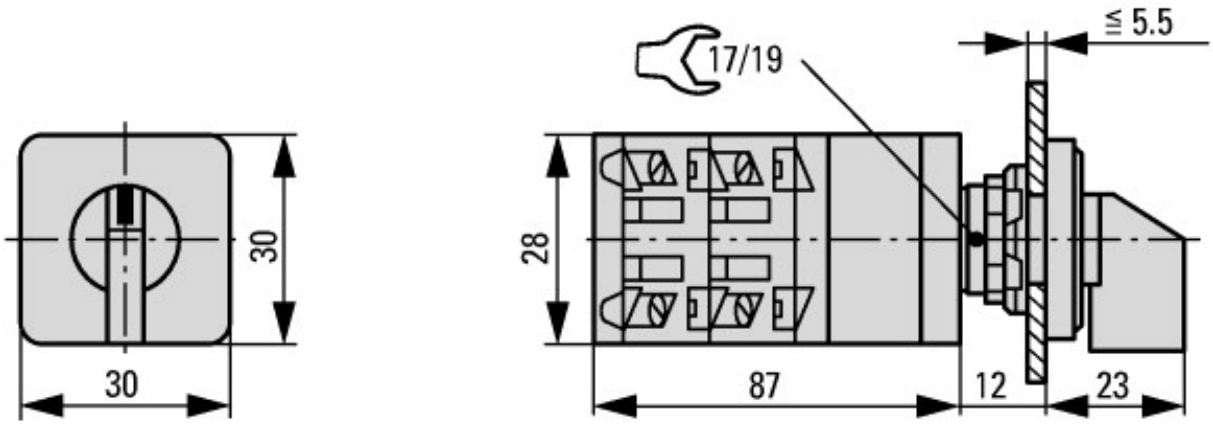


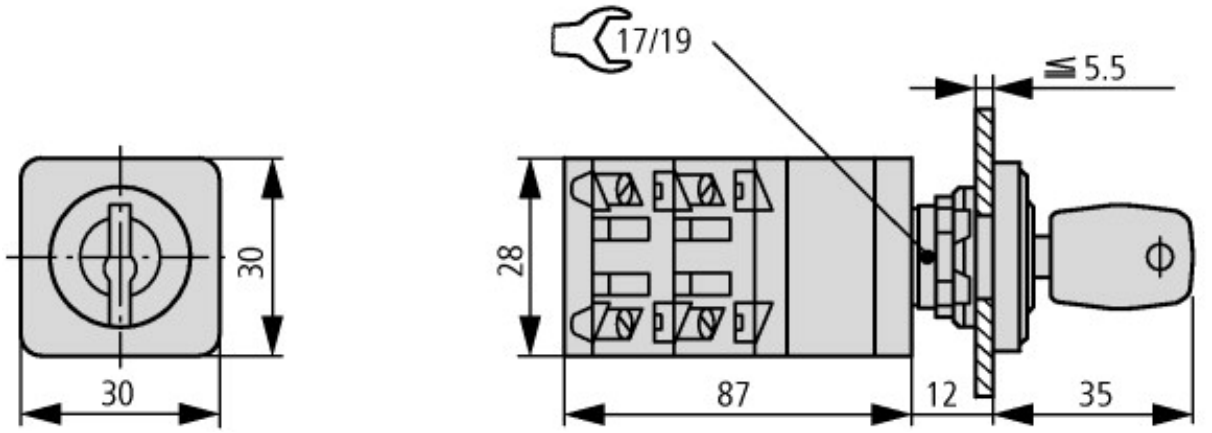


Key operation lock mechanism

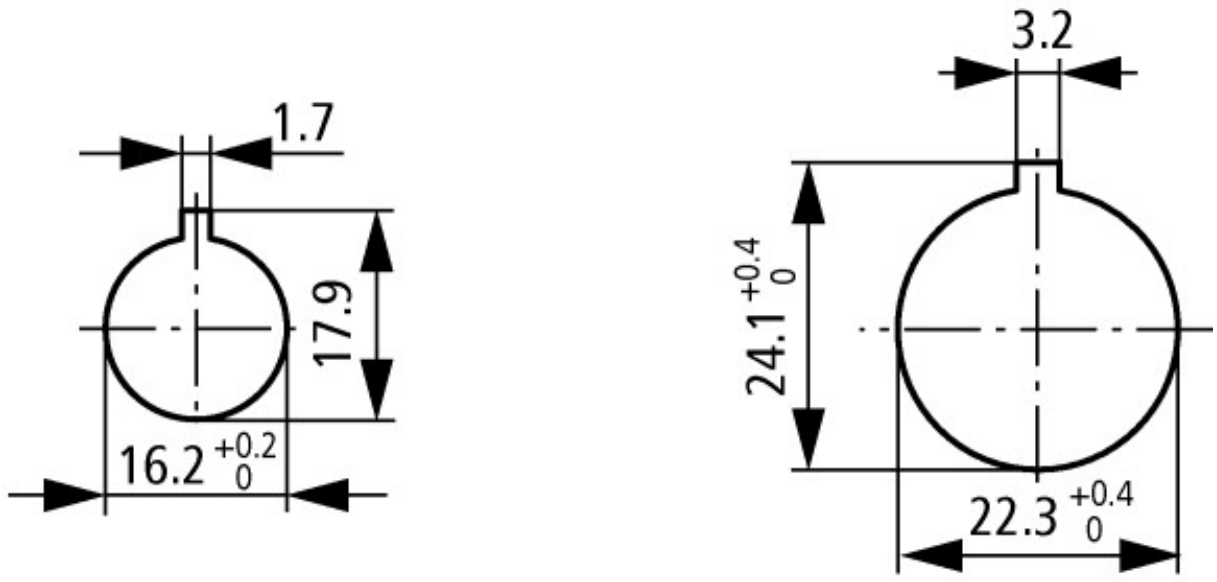


Door drilling dimensions
Drilling dimensions: either 16.2 mm = without reduction ≙ RMQ16 or 22.3 mm = with reduction ≙ RMQ Titan

## Assets (links)

### Declaration of CE Conformity

00002932

### Instruction Leaflets

IL03801026Z2018_04

## Additional product information (links)

| **IL03801026Z step switch** | |
|---|---|
| IL03801026Z step switch | ftp://ftp.moeller.net/DOCUMENTATION/AWA_INSTRUCTIONS/IL03801026Z2018_04.pdf |
| Display flip catalog page. | http://ecat.moeller.net/flip-cat/?edition=K115A&startpage=177 |
| Technical overview cam switch, switch-disconnector | http://de.ecat.moeller.net/flip-cat/?edition=HPLTEv1&startpage=4.2 |
| System overview cam switch T | http://de.ecat.moeller.net/flip-cat/?edition=HPLTEv1&startpage=4.4 |
| System overview switch-disconnector P | http://de.ecat.moeller.net/flip-cat/?edition=HPLTEv1&startpage=4.6 |
| Key to part numbers Cam switch | http://de.ecat.moeller.net/flip-cat/?edition=HPLTEv1&startpage=4.8 |
| Key to part numbers Switch-disconnector | http://de.ecat.moeller.net/flip-cat/?edition=HPLTEv1&startpage=4.8 |
| Switches for ATEX | http://www.coopercrouse-hinds.eu/en/products/25-ex-safety-and-main-current-switches.html |
| Ordering form for SOND switches and SOND front plates(DE_EN) | ftp://ftp.moeller.net/DOCUMENTATION/PDF/MZ008005ZU_Orderform_Customized_Switch.pdf |
| Ordering form for SOND switches and SOND front plates(DE_EN) | ftp://ftp.moeller.net/DOCUMENTATION/PDF/MZ008006ZU_Orderform_Customized_Switch.pdf |


© 07/2019 by Eaton Industries GmbH