DATASHEET - STI0,8(400/24)



Control transformer, 0.8 kVA, Rated input voltage 400± 5 % V, Rated output voltage 24 V

Part no.	**STI0,8(400/24)**
Catalog No.	**035254**
Alternate Catalog No.	**STI0P8-I2-B2**

Delivery program

Product range			Single-phase control transformers ST...
Basic function			Single-phase control, isolating and safety transformers STI, STZ
Rated input voltage		V	400± 5 %
Rated output voltage		V	24
Rated power		kVA	0.8
Short-time rating		kVA	2
Terminal diagram / contact assignment			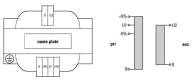
Cu factor 2,10			

Technical data

General

Standards			
Built and tested to			IEC/EN 61558-2-2/2-4/2-6 VDE 0570 Part 2-2 VDE 0570 Part 2-6 (safety transformers) VDE 0570 Part 2-4 (isolating transformer)
Suitable for use to			IEC/EN 60204-1, ÖVE-EN 13 VDE 0113, VDE 0100 Part 410
Ambient temperature			-25 - 40

Characteristics

Terminations			● (< 115 A)
Connection lugs			● (> 115 A)
Insulation class			B
Rated frequency		Hz	50 - 60
Primary tapping			± 5 %
Degree of Protection			IP00
Separate windings			●
Fully vacuum-impregnated			●
Reinforced insulation			●
Rated duty factor		% DF	100

Electrical characteristics

Note			The following applies for the no-load loss, short-circuit loss (copper losses), short-circuit voltage and efficiency values: all details relate to a temperature of 20 °C
Total weight		kg	9.6
No-load losses		W	17
Short-circuit losses		W	25
Shortcircuit voltage		%	3.2
Efficiency			0.95

Design verification as per IEC/EN 61439

Technical data for design verification			
Rated operational current for specified heat dissipation	I_n	A	0
Heat dissipation per pole, current-dependent	P_{vid}	W	0
Equipment heat dissipation, current-dependent	P_{vid}	W	0
Static heat dissipation, non-current-dependent	P_{vs}	W	42
Heat dissipation capacity	P_{diss}	W	0

Operating ambient temperature min.	°C	-25
Operating ambient temperature max.	°C	40
IEC/EN 61439 design verification		
10.2 Strength of materials and parts		
10.2.2 Corrosion resistance		Meets the product standard's requirements.
10.2.3.1 Verification of thermal stability of enclosures		Meets the product standard's requirements.
10.2.3.2 Verification of resistance of insulating materials to normal heat		Meets the product standard's requirements.
10.2.3.3 Verification of resistance of insulating materials to abnormal heat and fire due to internal electric effects		Meets the product standard's requirements.
10.2.4 Resistance to ultra-violet (UV) radiation		Meets the product standard's requirements.
10.2.5 Lifting		Does not apply, since the entire switchgear needs to be evaluated.
10.2.6 Mechanical impact		Does not apply, since the entire switchgear needs to be evaluated.
10.2.7 Inscriptions		Meets the product standard's requirements.
10.3 Degree of protection of ASSEMBLIES		Does not apply, since the entire switchgear needs to be evaluated.
10.4 Clearances and creepage distances		Meets the product standard's requirements.
10.5 Protection against electric shock		Does not apply, since the entire switchgear needs to be evaluated.
10.6 Incorporation of switching devices and components		Does not apply, since the entire switchgear needs to be evaluated.
10.7 Internal electrical circuits and connections		Is the panel builder's responsibility.
10.8 Connections for external conductors		Is the panel builder's responsibility.
10.9 Insulation properties		
10.9.2 Power-frequency electric strength		Is the panel builder's responsibility.
10.9.3 Impulse withstand voltage		Is the panel builder's responsibility.
10.9.4 Testing of enclosures made of insulating material		Is the panel builder's responsibility.
10.10 Temperature rise		The panel builder is responsible for the temperature rise calculation. Eaton will provide heat dissipation data for the devices.
10.11 Short-circuit rating		Is the panel builder's responsibility. The specifications for the switchgear must be observed.
10.12 Electromagnetic compatibility		Is the panel builder's responsibility. The specifications for the switchgear must be observed.
10.13 Mechanical function		The device meets the requirements, provided the information in the instruction leaflet (IL) is observed.

Technical data ETIM 7.0

Low-voltage industrial components (EG000017) / One-phase control transformer (EC002486)		
Electric engineering, automation, process control engineering / Transformer, converter, coil / Control transformer / One-phase control transformer (ecl@ss10.0.1-27-03-13-02 [AAB620015])		
Built as safety transformer		Yes
Built as isolating transformer		Yes
Built as energy saving transformer		No
Primary voltage 1	V	400 - 400
Primary voltage 2	V	0 - 0
Primary voltage 3	V	0 - 0
Primary voltage 4	V	0 - 0
Primary voltage 5	V	0 - 0
Primary voltage 6	V	0 - 0
Primary voltage 7	V	0 - 0
Primary voltage 8	V	0 - 0
Primary voltage 9	V	0 - 0
Primary voltage 10	V	0 - 0
Secondary voltage 1	V	24 - 24
Secondary voltage 2	V	0 - 0
Secondary voltage 3	V	0 - 0
Secondary voltage 4	V	0 - 0
Secondary voltage 5	V	0 - 0
Secondary voltage 6	V	0 - 0
Secondary voltage 7	V	0 - 0
Secondary voltage 8	V	0 - 0
Secondary voltage 9	V	0 - 0

Secondary voltage 10		V	0 - 0
Rated apparent power		VA	800
Type of insulation material acc. IEC 85			B
Short-circuit-proof			No
Relative short circuit voltage		%	3.2
Width		mm	151
Height		mm	211
Depth		mm	124
Degree of protection (IP)			IP00
Ring core			No
Suitable for mounting on PCB			No
Modular version			No
Conductor material			Copper

Approvals

Product Standards			UL 506; UL5085-1; UL 5085-2; CSA-C22.2 No. 66; CSA-C22.2 No. 66.1-06; CSA-C22.2 No. 66.2-06; IEC/EN 61558-2-2; CE marking
UL File No.			E167225
UL Category Control No.			XPTQ2, XPTQ8
CSA File No.			UL report applies to both US and Canada
CSA Class No.			–
North America Certification			UL recognized, certified by UL for use in Canada
Specially designed for North America			No
Suitable for			Branch circuits
Max. Voltage Rating			600 V AC
Degree of Protection			IEC: IP00, UL/CSA Type: -

Dimensions

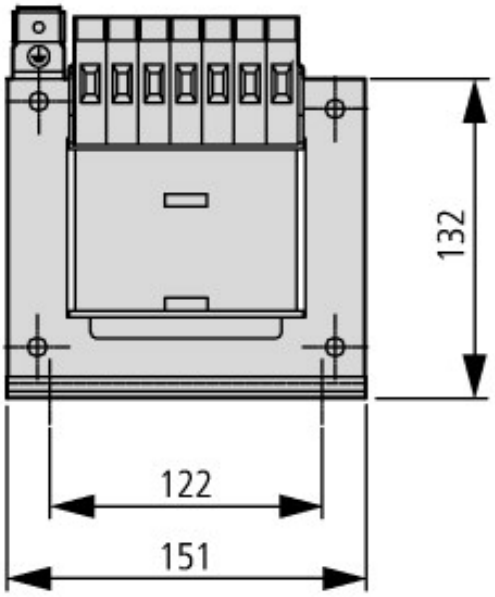

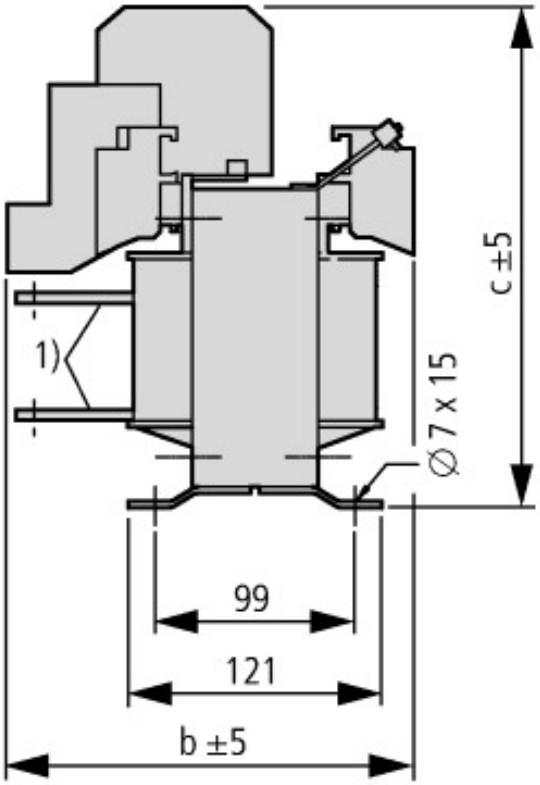

	b	c
12 V	-	-
24 V	138	157
42 V	124	145
110 V	124	145
230 V	124	145

① Connection lugs
② With STI/STZ0.06 … 0.16 ground connection at bottom

Assets (links)

Declaration of CE Conformity

00002800

© 07/2019 by Eaton Industries GmbH