DATASHEET - P1-32/E/SVA(A)





Similar to illustration

ON-OFF switches, 3 pole, 32 A, Cylinder lock SVA, flush mounting, P

Part no. P1-32/E/SVA(A)
Catalog No. 050970

Powering Business Worldwide™

Delivery program

Product range			Switch with locking mechanism
Part group reference			P1
Basic function			ON-OFF switches
			with black thumb grip and front plate
Information about equipment supplied			Auxiliary contact or neutral conductor fitted by user. with two keys
Number of poles			3 pole
Auxiliary contacts			
		N/O	0
		N/C	0
locking arrangement			Cylinder lock SVA
Notes			Key can only be withdrawn in position 0 (Pos A)
Locking facility			Lockable in the 0 (Off) position
Degree of Protection			Front IP65
Design			flush mounting
			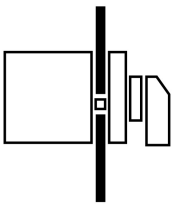
Contact sequence			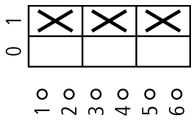
Front plate no.			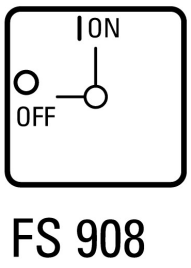 FS 908
Motor rating AC-23A, 50 - 60 Hz			
400 V	P	kW	15
Rated uninterrupted current	I_u	A	32
Note on rated uninterrupted current I_u			Rated uninterrupted current I_u is specified for max. cross-section.

Technical data

General

Standards			IEC/EN 60947, VDE 0660, IEC/EN 60204 Switch-disconnector according to IEC/EN 60947-3
Climatic proofing			Damp heat, constant, to IEC 60068-2-78 Damp heat, cyclic, to IEC 60068-2-30
Ambient temperature			
Open		°C	-25 - +50
Enclosed		°C	-25 - +40
Overvoltage category/pollution degree			III/3
Rated impulse withstand voltage	U_{imp}	V AC	6000
Mechanical shock resistance		g	15
Mounting position			As required

Contacts

Mechanical variables			
Number of poles			3 pole
Auxiliary contacts			
		N/O	0
		N/C	0
Electrical characteristics			
Rated operational voltage	U_e	V AC	690
Rated uninterrupted current	I_u	A	32
Note on rated uninterrupted current I_u			Rated uninterrupted current I_u is specified for max. cross-section.
Load rating with intermittent operation, class 12			
AB 25 % DF		x I_e	2
AB 40 % DF		x I_e	1.6
AB 60 % DF		x I_e	1.3
Short-circuit rating			
Fuse		A gG/gL	50
Rated short-time withstand current (1 s current)	I_{cw}	A_{rms}	640
Note on rated short-time withstand current Icw			Current for a time of 1 second
Rated conditional short-circuit current	I_q	kA	80

Switching capacity

cos φ rated making capacity as per IEC 60947-3		A	320
Rated breaking capacity cos φ to IEC 60947-3		A	
230 V		A	260
400/415 V		A	300
500 V		A	290
690 V		A	250
Safe isolation to EN 61140			
between the contacts		V AC	440
Current heat loss per contact at I_e		W	1.8
Lifespan, mechanical	Operations	x 10^6	> 0.3
Maximum operating frequency	Operations/h		1200
AC			
AC-3			
Rating, motor load switch	P	kW	
220 V 230 V	P	kW	7.5
400 V 415 V	P	kW	13
500 V	P	kW	18.5
690 V	P	kW	15
Rated operational current motor load switch			
230 V	I_e	A	26.4
400V 415 V	I_e	A	26.4
500 V	I_e	A	23.4

690 V	I_e	A	14.7
AC-21A			
Rated operational current switch			
440 V	I_e	A	32
AC-23A			
Motor rating AC-23A, 50 - 60 Hz	P	kW	
230 V	P	kW	7.5
400 V 415 V	P	kW	15
500 V	P	kW	18.5
690 V	P	kW	15
Rated operational current motor load switch			
230 V	I_e	A	32
400 V 415 V	I_e	A	32
500 V	I_e	A	30
690 V	I_e	A	19.8
DC			
DC-1, Load-break switches L/R = 1 ms			
Rated operational current	I_e	A	32
Voltage per contact pair in series		V	60
DC-23A, motor load switch L/R = 15 ms			
24 V			
Rated operational current	I_e	A	25
Contacts		Quantity	1
48 V			
Rated operational current	I_e	A	25
Contacts		Quantity	2
60 V			
Rated operational current	I_e	A	25
Contacts		Quantity	2
120 V			
Rated operational current	I_e	A	12
Contacts		Quantity	3
Control circuit reliability at 24 V DC, 10 mA	Fault probability	H_F	$< 10^{-5}$, < 1 fault in 100000 operations

Terminal capacities

Solid or stranded		mm^2	1 x (1,5 - 6) 2 x (1,5 - 6)
Flexible with ferrules to DIN 46228		mm^2	1 x (1 - 4) 2 x (1 - 4)
Terminal screw			M4
Tightening torque for terminal screw		Nm	1.6

Technical safety parameters:

Notes			$B10_d$ values as per EN ISO 13849-1, table C1

Rating data for approved types

Terminal capacity			
Terminal screw			M4
Tightening torque		lb-in	14.128

Design verification as per IEC/EN 61439

Technical data for design verification			
Rated operational current for specified heat dissipation	I_n	A	32
Heat dissipation per pole, current-dependent	P_{vid}	W	1.8
Equipment heat dissipation, current-dependent	P_{vid}	W	0
Static heat dissipation, non-current-dependent	P_{vs}	W	0
Heat dissipation capacity	P_{diss}	W	0
Operating ambient temperature min.		°C	-25

Operating ambient temperature max.	°C	50
IEC/EN 61439 design verification		
10.2 Strength of materials and parts		
10.2.2 Corrosion resistance		Meets the product standard's requirements.
10.2.3.1 Verification of thermal stability of enclosures		Meets the product standard's requirements.
10.2.3.2 Verification of resistance of insulating materials to normal heat		Meets the product standard's requirements.
10.2.3.3 Verification of resistance of insulating materials to abnormal heat and fire due to internal electric effects		Meets the product standard's requirements.
10.2.4 Resistance to ultra-violet (UV) radiation		UV resistance only in connection with protective shield.
10.2.5 Lifting		Does not apply, since the entire switchgear needs to be evaluated.
10.2.6 Mechanical impact		Does not apply, since the entire switchgear needs to be evaluated.
10.2.7 Inscriptions		Meets the product standard's requirements.
10.3 Degree of protection of ASSEMBLIES		Does not apply, since the entire switchgear needs to be evaluated.
10.4 Clearances and creepage distances		Meets the product standard's requirements.
10.5 Protection against electric shock		Does not apply, since the entire switchgear needs to be evaluated.
10.6 Incorporation of switching devices and components		Does not apply, since the entire switchgear needs to be evaluated.
10.7 Internal electrical circuits and connections		Is the panel builder's responsibility.
10.8 Connections for external conductors		Is the panel builder's responsibility.
10.9 Insulation properties		
10.9.2 Power-frequency electric strength		Is the panel builder's responsibility.
10.9.3 Impulse withstand voltage		Is the panel builder's responsibility.
10.9.4 Testing of enclosures made of insulating material		Is the panel builder's responsibility.
10.10 Temperature rise		The panel builder is responsible for the temperature rise calculation. Eaton will provide heat dissipation data for the devices.
10.11 Short-circuit rating		Is the panel builder's responsibility. The specifications for the switchgear must be observed.
10.12 Electromagnetic compatibility		Is the panel builder's responsibility. The specifications for the switchgear must be observed.
10.13 Mechanical function		The device meets the requirements, provided the information in the instruction leaflet (IL) is observed.

Technical data ETIM 7.0

Low-voltage industrial components (EG000017) / Switch disconnector (EC000216)		
Electric engineering, automation, process control engineering / Low-voltage switch technology / Off-load switch, circuit breaker, control switch / Switch disconnector (ecl@ss10.0.1-27-37-14-03 [AKF060013])		
Version as main switch		No
Version as maintenance-/service switch		No
Version as safety switch		No
Version as emergency stop installation		No
Version as reversing switch		No
Number of switches		1
Max. rated operation voltage Ue AC	V	690
Rated operating voltage	V	690 - 690
Rated permanent current Iu	A	32
Rated permanent current at AC-23, 400 V	A	32
Rated permanent current at AC-21, 400 V	A	32
Rated operation power at AC-3, 400 V	kW	13
Rated short-time withstand current Icw	kA	0.64
Rated operation power at AC-23, 400 V	kW	15
Switching power at 400 V	kW	15
Conditioned rated short-circuit current Iq	kA	80
Number of poles		3
Number of auxiliary contacts as normally closed contact		0
Number of auxiliary contacts as normally open contact		0
Number of auxiliary contacts as change-over contact		0
Motor drive optional		No
Motor drive integrated		No
Voltage release optional		No

Device construction	Built-in device fixed built-in technique
Suitable for ground mounting	No
Suitable for front mounting 4-hole	Yes
Suitable for front mounting centre	No
Suitable for distribution board installation	No
Suitable for intermediate mounting	No
Colour control element	Black
Type of control element	Toggle
Interlockable	No
Type of electrical connection of main circuit	Screw connection
Degree of protection (IP), front side	IP65
Degree of protection (NEMA)	Other

Dimensions

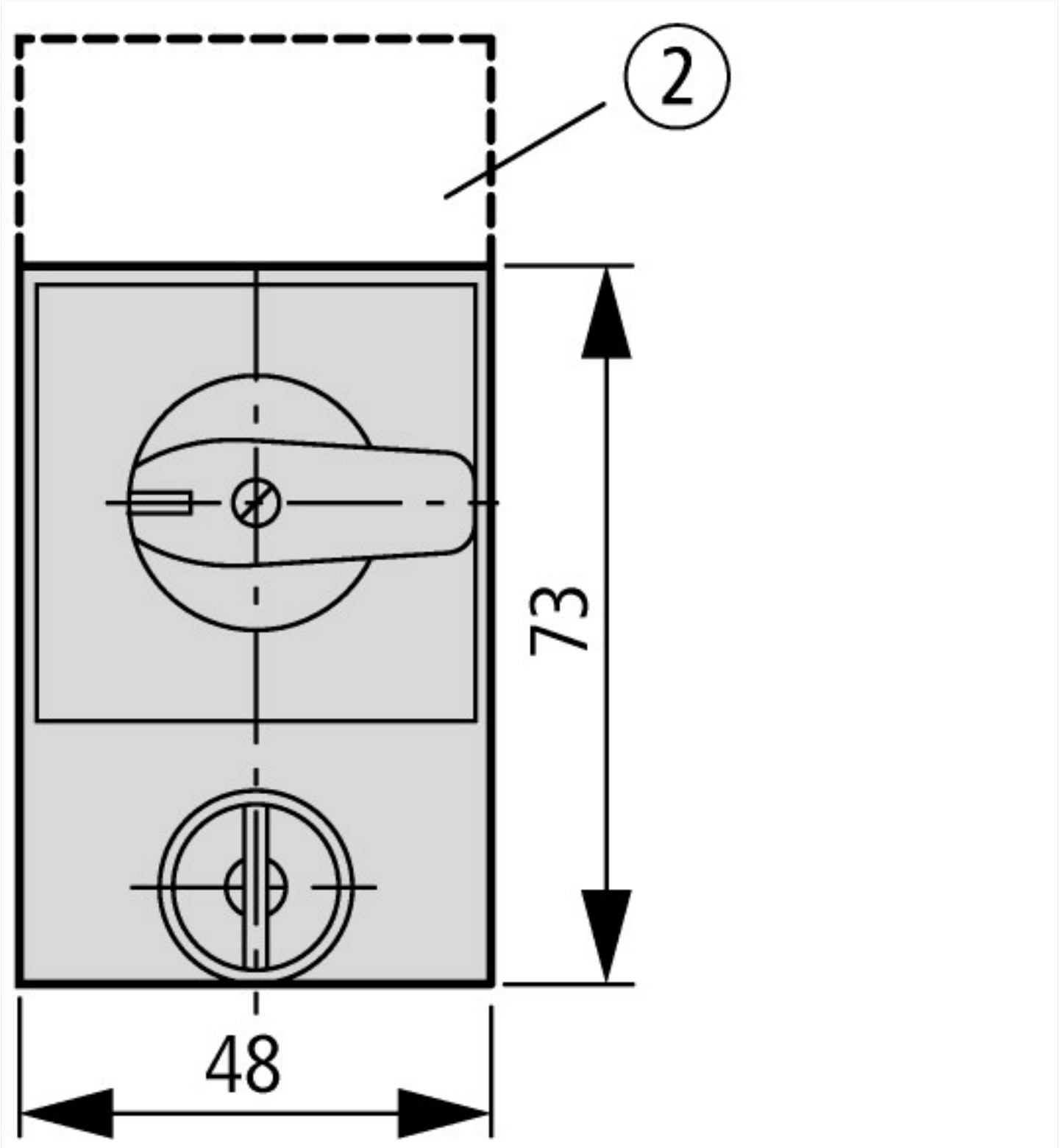

SVA-T3
② ZFS-... Label mount not included as standard

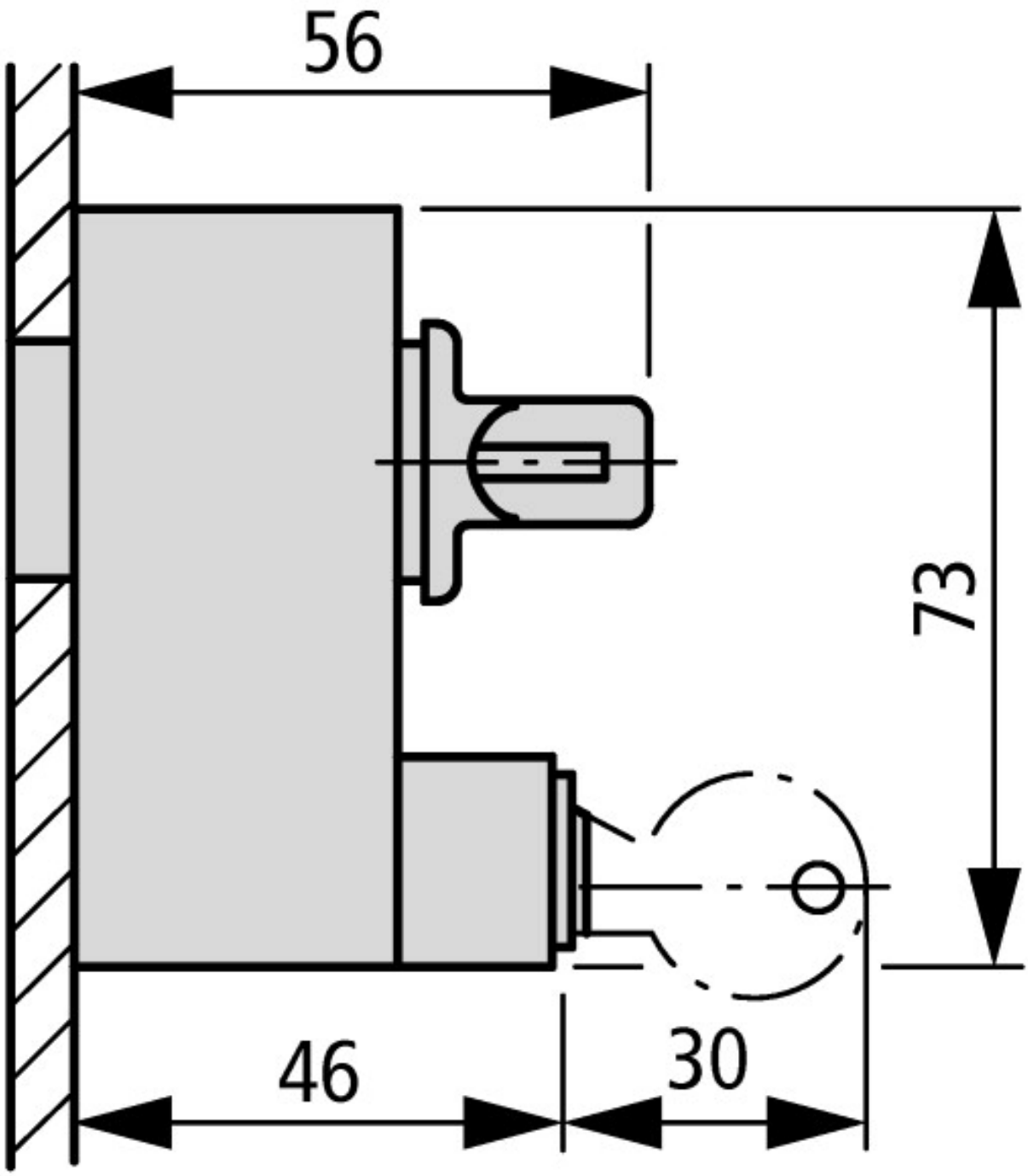

Assets (links)

Declaration of CE Conformity
00003102

Instruction Leaflets
IL03801015Z2018_05

Additional product information (links)

IL03801015Z (AWA1150-1367, AWA115-1368) Cylinder lock, Padlocking feature	
IL03801015Z (AWA1150-1367, AWA115-1368) Cylinder lock, Padlocking feature	ftp://ftp.moeller.net/DOCUMENTATION/AWA_INSTRUCTIONS/IL03801015Z2018_05.pdf
Technical overview cam switch, switch-disconnector	http://de.ecat.moeller.net/flip-cat/?edition=HPLTEv1&startpage=4.2
System overview cam switch T	http://de.ecat.moeller.net/flip-cat/?edition=HPLTEv1&startpage=4.4
System overview switch-disconnector P	http://de.ecat.moeller.net/flip-cat/?edition=HPLTEv1&startpage=4.6
Key to part numbers Cam switch	http://de.ecat.moeller.net/flip-cat/?edition=HPLTEv1&startpage=4.8
Key to part numbers Switch-disconnector	http://de.ecat.moeller.net/flip-cat/?edition=HPLTEv1&startpage=4.8
Switches for ATEX	http://www.coopercrouse-hinds.eu/en/products/25-ex-safety-and-main-current-switches.html

Ordering form for SOND switches and SOND front plates(DE_EN)	ftp://ftp.moeller.net/DOCUMENTATION/PDF/MZ008005ZU_Orderform_Customized_Switch.pdf
Ordering form for SOND switches and SOND front plates(DE_EN)	ftp://ftp.moeller.net/DOCUMENTATION/PDF/MZ008006ZU_Orderform_Customized_Switch.pdf

© 07/2019 by Eaton Industries GmbH