DATASHEET - TM-3-8222/EZ



Similar to illustration

Changeoverswitches, Contacts: 6, 10 A, front plate: 1-2, 60 °, maintained, centre mounting

Powering Business Worldwide™

Part no.	**TM-3-8222/EZ**
Catalog No.	**045493**
EL-Nummer (Norway)	**0001456159**

Delivery program

Product range			Control switches
Part group reference			TM
Basic function			Changeoverswitches
			with black thumb grip and front plate
Contacts			6
Degree of Protection			Front IP65
Design			centre mounting
			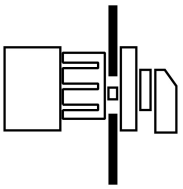
Contact sequence			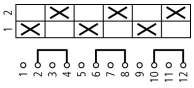
Switching angle		°	60
Switching performance			maintained Without 0 (Off) position
Design number			8222
Front plate no.			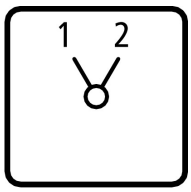 F 072
front plate			1-2
Motor rating AC-23A, 50 - 60 Hz			
400 V	P	kW	3
Rated uninterrupted current	I_u	A	10
Note on rated uninterrupted current I_u			Rated uninterrupted current I_u is specified for max. cross-section.
Number of contact units		contact unit(s)	3

Technical data

General

Standards			IEC/EN 60947, VDE 0660, CSA, UL Control switch as per IEC/EN 60947-5-1 Auxiliary switch as per IEC/EN 60947-5-1
Climatic proofing			Damp heat, constant, to IEC 60068-2-78 Damp heat, cyclic, to IEC 60068-2-30
Ambient temperature			
Open		°C	-25 - +50
Overvoltage category/pollution degree			III/3
Rated impulse withstand voltage	U_{imp}	V AC	4000

Mounting position			As required

Contacts

Electrical characteristics			
Rated operational voltage	U_e	V AC	500
Rated uninterrupted current	I_u	A	10
Note on rated uninterrupted current I_u			Rated uninterrupted current I_u is specified for max. cross-section.
Short-circuit rating			
Fuse		A gG/gL	10

Switching capacity

Safe isolation to EN 61140			
Current heat loss per contact at I_e		W	0.15
Current heat loss per auxiliary circuit at I_e (AC-15/230 V)		CO	0.15
Lifespan, mechanical	Operations	x 10^6	> 1
Maximum operating frequency	Operations/h		1200
AC			
AC-23A			
Motor rating AC-23A, 50 - 60 Hz	P	kW	
400 V 415 V	P	kW	3
Control circuit reliability at 24 V DC, 10 mA	Fault probability	H_F	< 10^{-5}, < 1 fault in 100000 operations

Terminal capacities

Solid or stranded		mm^2	1 x 1,5 2 x 1,5
Flexible with ferrules to DIN 46228		mm^2	1 x 1.0 2 x 1.0
Flexible		mm^2	1 x 1.5 2 x 1.5
Terminal screw			M2.5
Tightening torque for terminal screw		Nm	0.4

Rating data for approved types

Contacts			
Rated operational voltage	U_e	V AC	300
Rated uninterrupted current max.			
Main conducting paths			
General use		A	10
Auxiliary contacts			
General Use	I_U	A	10
Pilot Duty			A 300
Switching capacity			
Maximum motor rating			
Single-phase			
120 V AC		HP	0.33
240 V AC		HP	0.75
277 V AC		HP	0.75
Three-phase			
120 V AC		HP	0.75
240 V AC		HP	1
Terminal capacity			
Solid or flexible conductor with ferrule		AWG	14
Terminal screw			M2.5
Tightening torque		lb-in	3.5

Design verification as per IEC/EN 61439

Technical data for design verification			
Rated operational current for specified heat dissipation	I_n	A	10
Heat dissipation per pole, current-dependent	P_{vid}	W	0.15
Equipment heat dissipation, current-dependent	P_{vid}	W	0

Static heat dissipation, non-current-dependent	P_{vs}	W	0
Heat dissipation capacity	P_{diss}	W	0
Operating ambient temperature min.		°C	-25
Operating ambient temperature max.		°C	50
IEC/EN 61439 design verification			
10.2 Strength of materials and parts			
10.2.2 Corrosion resistance			Meets the product standard's requirements.
10.2.3.1 Verification of thermal stability of enclosures			Meets the product standard's requirements.
10.2.3.2 Verification of resistance of insulating materials to normal heat			Meets the product standard's requirements.
10.2.3.3 Verification of resistance of insulating materials to abnormal heat and fire due to internal electric effects			Meets the product standard's requirements.
10.2.4 Resistance to ultra-violet (UV) radiation			UV resistance only in connection with protective shield.
10.2.5 Lifting			Does not apply, since the entire switchgear needs to be evaluated.
10.2.6 Mechanical impact			Does not apply, since the entire switchgear needs to be evaluated.
10.2.7 Inscriptions			Meets the product standard's requirements.
10.3 Degree of protection of ASSEMBLIES			Does not apply, since the entire switchgear needs to be evaluated.
10.4 Clearances and creepage distances			Meets the product standard's requirements.
10.5 Protection against electric shock			Does not apply, since the entire switchgear needs to be evaluated.
10.6 Incorporation of switching devices and components			Does not apply, since the entire switchgear needs to be evaluated.
10.7 Internal electrical circuits and connections			Is the panel builder's responsibility.
10.8 Connections for external conductors			Is the panel builder's responsibility.
10.9 Insulation properties			
10.9.2 Power-frequency electric strength			Is the panel builder's responsibility.
10.9.3 Impulse withstand voltage			Is the panel builder's responsibility.
10.9.4 Testing of enclosures made of insulating material			Is the panel builder's responsibility.
10.10 Temperature rise			The panel builder is responsible for the temperature rise calculation. Eaton will provide heat dissipation data for the devices.
10.11 Short-circuit rating			Is the panel builder's responsibility. The specifications for the switchgear must be observed.
10.12 Electromagnetic compatibility			Is the panel builder's responsibility. The specifications for the switchgear must be observed.
10.13 Mechanical function			The device meets the requirements, provided the information in the instruction leaflet (IL) is observed.

Technical data ETIM 7.0

Low-voltage industrial components (EG000017) / Off-load switch (EC001105)			
Electric engineering, automation, process control engineering / Low-voltage switch technology / Off-load switch, circuit breaker, control switch / Changeover switch (ecl@ss10.0.1-27-37-14-05 [AKF062013])			
Model			Reverser
Number of poles			3
With 0 (off) position			No
With retraction in 0-position			No
Rated permanent current Iu		A	10
Rated operation current Ie at AC-3, 400 V		A	0
Rated operation power at AC-3, 400 V		kW	3.3
Degree of protection (IP), front side			IP65
Degree of protection (NEMA), front side			Other
Number of auxiliary contacts as normally closed contact			0
Number of auxiliary contacts as normally open contact			0
Number of auxiliary contacts as change-over contact			0
Suitable for ground mounting			No
Suitable for front mounting 4-hole			Yes
Suitable for distribution board installation			No
Suitable for intermediate mounting			No
Complete device in housing			No
Material housing			Plastic
Type of control element			Toggle

Type of electrical connection of main circuit	Screw connection

Approvals

Product Standards	UL 508; CSA-C22.2 No. 14-05; CSA-C22.2 No. 94; IEC/EN 60947-3; CE marking
UL File No.	E36332
UL Category Control No.	NLRV
CSA File No.	UL report applies to both US and Canada
North America Certification	UL listed, certified by UL for use in Canada
Degree of Protection	IEC: IP65; UL/CSA Type: –

Dimensions

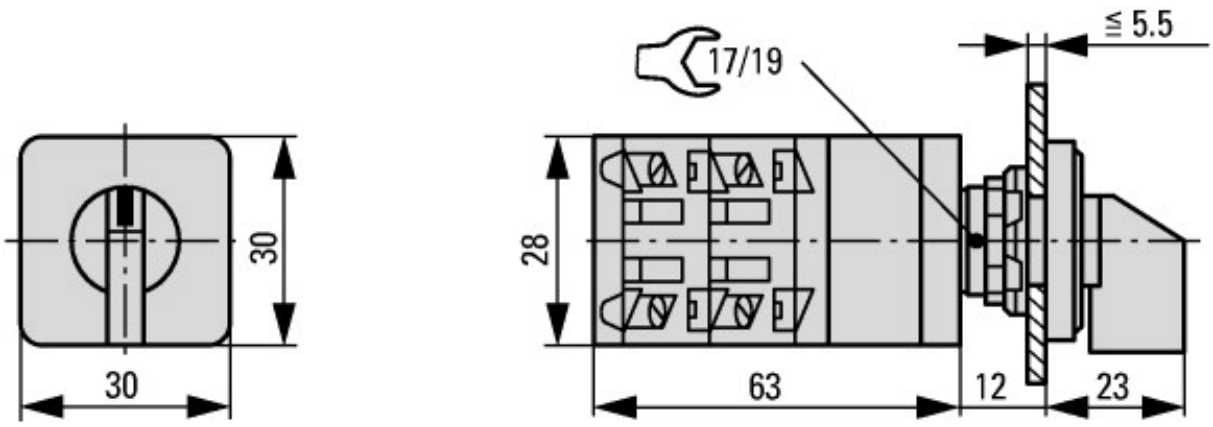

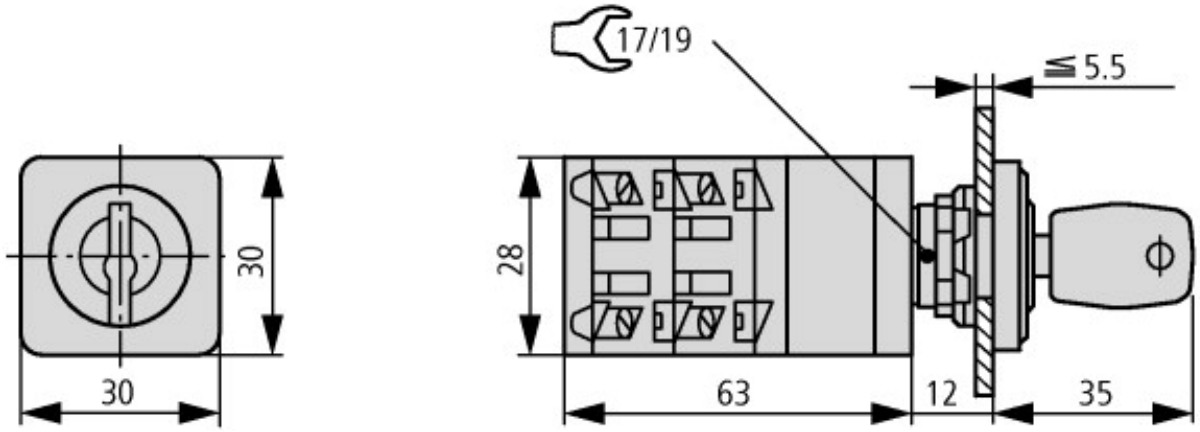

Key operation lock mechanism

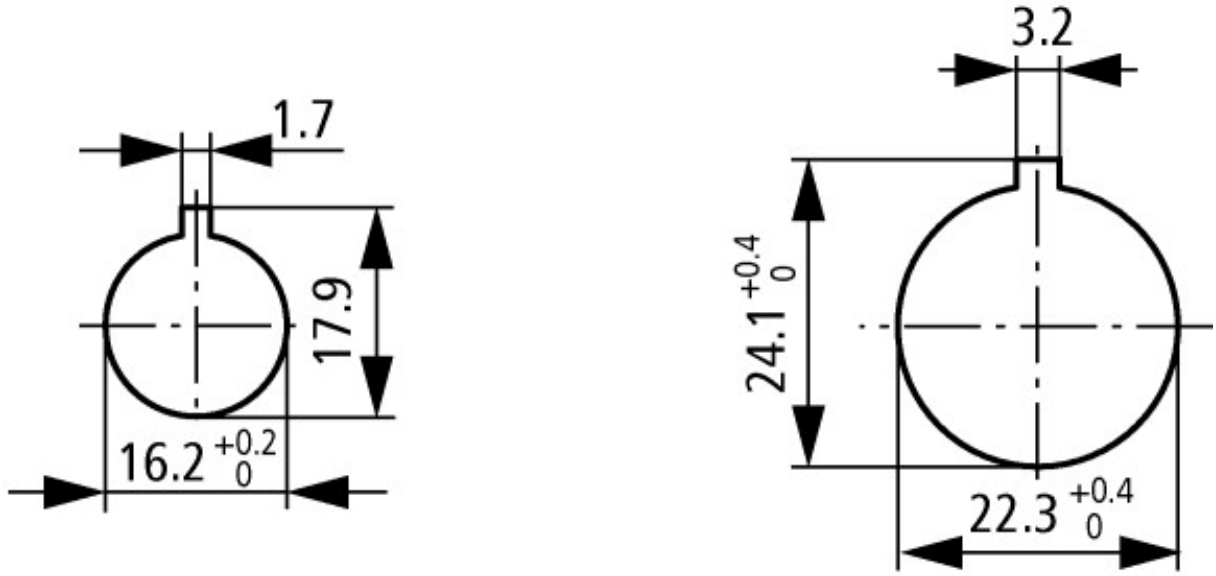

Door drilling dimensions
Drilling dimensions: either 16.2 mm = without reduction ≙ RMQ16 or 22.3 mm = with reduction ≙ RMQ Titan

Assets (links)

Declaration of CE Conformity

00002932

Instruction Leaflets

IL03801025Z2018_04

Additional product information (links)

IL03801025Z On-Off-switch, changeover switch, control switch	
IL03801025Z On-Off-switch, changeover switch, control switch	ftp://ftp.moeller.net/DOCUMENTATION/AWA_INSTRUCTIONS/IL03801025Z2018_04.pdf
Display flip catalog page.	http://ecat.moeller.net/flip-cat/?edition=K115A&startpage=134
Technical overview cam switch, switch-disconnector	http://de.ecat.moeller.net/flip-cat/?edition=HPLTEv1&startpage=4.2
System overview cam switch T	http://de.ecat.moeller.net/flip-cat/?edition=HPLTEv1&startpage=4.4
System overview switch-disconnector P	http://de.ecat.moeller.net/flip-cat/?edition=HPLTEv1&startpage=4.6
Key to part numbers Cam switch	http://de.ecat.moeller.net/flip-cat/?edition=HPLTEv1&startpage=4.8
Key to part numbers Switch-disconnector	http://de.ecat.moeller.net/flip-cat/?edition=HPLTEv1&startpage=4.8
Switches for ATEX	http://www.coopercrouse-hinds.eu/en/products/25-ex-safety-and-main-current-switches.html
Ordering form for SOND switches and SOND front plates(DE_EN)	ftp://ftp.moeller.net/DOCUMENTATION/PDF/MZ008005ZU_Orderform_Customized_Switch.pdf
Ordering form for SOND switches and SOND front plates(DE_EN)	ftp://ftp.moeller.net/DOCUMENTATION/PDF/MZ008006ZU_Orderform_Customized_Switch.pdf

© 07/2019 by Eaton Industries GmbH