# DATASHEET - T0-3-8280/IVS






Similar to illustration

**Step switches, Contacts: 6, 20 A, front plate: 0-2, 45 °, 2 steps, 45°, maintained, service distribution board mounting**

**Part no.** T0-3-8280/IVS
**Catalog No.** 041225

Powering Business Worldwide™

## Delivery program

| | | | |
|---|---|---|---|
| Product range | | | Control switches |
| Part group reference | | | T0 |
| Basic function | | | Step switches |
| | | | with black thumb grip and front plate |
| Contacts | | | 6 |
| Number of steps | | | 2 steps, 45° |
| Degree of Protection | | | Front IP30 |
| Design | | | service distribution board mounting |
| | | | 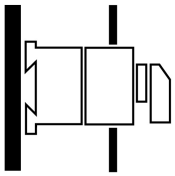 |
| Contact sequence | | | 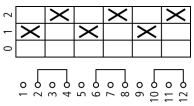 |
| Switching angle | | ° | 45 |
| Switching performance | | | maintained<br>With 0 (Off) position |
| Design number | | | 8280 |
| Front plate no. | | | 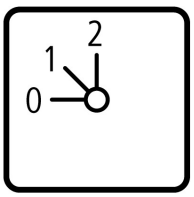<br>FS 418 |
| front plate | | | 0-2 |
| **Motor rating AC-23A, 50 - 60 Hz** | | | |
| 400 V | P | kW | 5.5 |
| Rated uninterrupted current | $I_u$ | A | 20 |
| Note on rated uninterrupted current $I_u$ | | | Rated uninterrupted current $I_u$ is specified for max. cross-section. |
| Number of contact units | | contact unit(s) | 3 |

## Technical data

### General

| | | | |
|---|---|---|---|
| Standards | | | IEC/EN 60947, VDE 0660, IEC/EN 60204, CSA, UL<br>Switch-disconnector according to IEC/EN 60947-3 |
| Climatic proofing | | | Damp heat, constant, to IEC 60068-2-78<br>Damp heat, cyclic, to IEC 60068-2-30 |
| Ambient temperature | | | |
| Open | | °C | -25 - +50 |
| Enclosed | | °C | -25 - +40 |

| | | | |
|---|---|---|---|
| Overvoltage category/pollution degree | | | III/3 |
| Rated impulse withstand voltage | $U_{imp}$ | V AC | 6000 |
| Mechanical shock resistance | | g | 15 |
| Mounting position | | | As required |

## Contacts

| | | | |
|---|---|---|---|
| Electrical characteristics | | | |
| Rated operational voltage | $U_e$ | V AC | 690 |
| Rated uninterrupted current | $I_u$ | A | 20 |
| Note on rated uninterrupted current $!_u$ | | | Rated uninterrupted current $I_u$ is specified for max. cross-section. |
| Load rating with intermittent operation, class 12 | | | |
| AB 25 % DF | | x $I_e$ | 2 |
| AB 40 % DF | | x $I_e$ | 1.6 |
| AB 60 % DF | | x $I_e$ | 1.3 |
| Short-circuit rating | | | |
| Fuse | | A gG/gL | 20 |
| Rated short-time withstand current (1 s current) | $I_{cw}$ | $A_{rms}$ | 320 |
| Note on rated short-time withstand current Icw | | | Current for a time of 1 second |
| Rated conditional short-circuit current | $I_q$ | kA | 6 |

## Switching capacity

| | | | |
|---|---|---|---|
| cos φ rated making capacity as per IEC 60947-3 | | A | 130 |
| Rated breaking capacity cos φ to IEC 60947-3 | | A | |
| 230 V | | A | 100 |
| 400/415 V | | A | 110 |
| 500 V | | A | 80 |
| 690 V | | A | 60 |
| Safe isolation to EN 61140 | | | |
| between the contacts | | V AC | 440 |
| Current heat loss per contact at $I_e$ | | W | 0.6 |
| Current heat loss per auxiliary circuit at $I_e$ (AC-15/230 V) | | CO | 0.6 |
| Lifespan, mechanical | Operations | x $10^6$ | > 0.4 |
| Maximum operating frequency | Operations/h | | 1200 |
| AC | | | |
| AC-3 | | | |
| Rating, motor load switch | P | kW | |
| 220 V 230 V | P | kW | 3 |
| 230 V Star-delta | P | kW | 5.5 |
| 400 V 415 V | P | kW | 5.5 |
| 400 V Star-delta | P | kW | 7.5 |
| 500 V | P | kW | 5.5 |
| 500 V Star-delta | P | kW | 7.5 |
| 690 V | P | kW | 4 |
| 690 V Star-delta | P | kW | 5.5 |
| Rated operational current motor load switch | | | |
| 230 V | $I_e$ | A | 11.5 |
| 230 V star-delta | $I_e$ | A | 20 |
| 400V 415 V | $I_e$ | A | 11.5 |
| 400 V star-delta | $I_e$ | A | 20 |
| 500 V | $I_e$ | A | 9 |
| 500 V star-delta | $I_e$ | A | 15.6 |
| 690 V | $I_e$ | A | 4.9 |
| 690 V star-delta | $I_e$ | A | 8.5 |
| AC-21A | | | |
| Rated operational current switch | | | |
| 440 V | $I_e$ | A | 20 |

| | | | |
|---|---|---|---|
| AC-23A | | | |
| Motor rating AC-23A, 50 - 60 Hz | P | kW | |
| 230 V | P | kW | 3 |
| 400 V 415 V | P | kW | 5.5 |
| 500 V | P | kW | 7.5 |
| 690 V | P | kW | 5.5 |
| Rated operational current motor load switch | | | |
| 230 V | $I_e$ | A | 13.3 |
| 400 V 415 V | $I_e$ | A | 13.3 |
| 500 V | $I_e$ | A | 13.3 |
| 690 V | $I_e$ | A | 7.6 |
| DC | | | |
| DC-1, Load-break switches L/R = 1 ms | | | |
| Rated operational current | $I_e$ | A | 10 |
| Voltage per contact pair in series | | V | 60 |
| DC-21A | $I_e$ | A | |
| Rated operational current | $I_e$ | A | 1 |
| Contacts | | Quantity | 1 |
| DC-23A, motor load switch L/R = 15 ms | | | |
| 24 V | | | |
| Rated operational current | $I_e$ | A | 10 |
| Contacts | | Quantity | 1 |
| 48 V | | | |
| Rated operational current | $I_e$ | A | 10 |
| Contacts | | Quantity | 2 |
| 60 V | | | |
| Rated operational current | $I_e$ | A | 10 |
| Contacts | | Quantity | 3 |
| 120 V | | | |
| Rated operational current | $I_e$ | A | 5 |
| Contacts | | Quantity | 3 |
| 240 V | | | |
| Rated operational current | $I_e$ | A | 5 |
| Contacts | | Quantity | 5 |
| DC-13, Control switches L/R = 50 ms | | | |
| Rated operational current | $I_e$ | A | 10 |
| Voltage per contact pair in series | | V | 32 |
| Control circuit reliability at 24 V DC, 10 mA | Fault probability | $H_F$ | $< 10^{-5}$, < 1 fault in 100000 operations |

## Terminal capacities

| | | | |
|---|---|---|---|
| Solid or stranded | | $mm^2$ | 1 x (1 - 2,5)<br>2 x (1 - 2,5) |
| Flexible with ferrules to DIN 46228 | | $mm^2$ | 1 x (0.75 - 2.5)<br>2 x (0.75 - 2.5) |
| Terminal screw | | | M3.5 |
| Tightening torque for terminal screw | | Nm | 1 |

## Technical safety parameters:

| | | | |
|---|---|---|---|
| **Notes** | | | $B10_d$ values as per EN ISO 13849-1, table C1 |

## Rating data for approved types

| | | | |
|---|---|---|---|
| Contacts | | | |
| Rated operational voltage | $U_e$ | V AC | 600 |
| Rated uninterrupted current max. | | | |
| Main conducting paths | | | |
| General use | | A | 16 |
| Auxiliary contacts | | | |
| General Use | $I_U$ | A | 10 |

| | | | |
|---|---|---|---|
| Pilot Duty | | | A 600<br>P 600 |
| Switching capacity | | | |
| Maximum motor rating | | | |
| Single-phase | | | |
| 120 V AC | | HP | 0.5 |
| 200 V AC | | HP | 1 |
| 240 V AC | | HP | 1.5 |
| Three-phase | | | |
| 200 V AC | | HP | 3 |
| 240 V AC | | HP | 3 |
| 480 V AC | | HP | 7.5 |
| 600 V AC | | HP | 7.5 |
| Short Circuit Current Rating | | SCCR | |
| Basic Rating | | kA | 5 |
| max. Fuse | | A | 50 |
| High fault rating | | kA | 10 |
| max. Fuse | | A | 20, Class J |
| Terminal capacity | | | |
| Solid or flexible conductor with ferrule | | AWG | 18 - 14 |
| Terminal screw | | | M3.5 |
| Tightening torque | | lb-in | 8.8 |

## Design verification as per IEC/EN 61439

| | | | |
|---|---|---|---|
| Technical data for design verification | | | |
| Rated operational current for specified heat dissipation | $I_n$ | A | 20 |
| Heat dissipation per pole, current-dependent | $P_{vid}$ | W | 0.6 |
| Equipment heat dissipation, current-dependent | $P_{vid}$ | W | 0 |
| Static heat dissipation, non-current-dependent | $P_{vs}$ | W | 0 |
| Heat dissipation capacity | $P_{diss}$ | W | 0 |
| Operating ambient temperature min. | | °C | -25 |
| Operating ambient temperature max. | | °C | 50 |
| IEC/EN 61439 design verification | | | |
| 10.2 Strength of materials and parts | | | |
| 10.2.2 Corrosion resistance | | | Meets the product standard's requirements. |
| 10.2.3.1 Verification of thermal stability of enclosures | | | Meets the product standard's requirements. |
| 10.2.3.2 Verification of resistance of insulating materials to normal heat | | | Meets the product standard's requirements. |
| 10.2.3.3 Verification of resistance of insulating materials to abnormal heat and fire due to internal electric effects | | | Meets the product standard's requirements. |
| 10.2.4 Resistance to ultra-violet (UV) radiation | | | Meets the product standard's requirements. |
| 10.2.5 Lifting | | | Does not apply, since the entire switchgear needs to be evaluated. |
| 10.2.6 Mechanical impact | | | Does not apply, since the entire switchgear needs to be evaluated. |
| 10.2.7 Inscriptions | | | Meets the product standard's requirements. |
| 10.3 Degree of protection of ASSEMBLIES | | | Does not apply, since the entire switchgear needs to be evaluated. |
| 10.4 Clearances and creepage distances | | | Meets the product standard's requirements. |
| 10.5 Protection against electric shock | | | Does not apply, since the entire switchgear needs to be evaluated. |
| 10.6 Incorporation of switching devices and components | | | Does not apply, since the entire switchgear needs to be evaluated. |
| 10.7 Internal electrical circuits and connections | | | Is the panel builder's responsibility. |
| 10.8 Connections for external conductors | | | Is the panel builder's responsibility. |
| 10.9 Insulation properties | | | |
| 10.9.2 Power-frequency electric strength | | | Is the panel builder's responsibility. |
| 10.9.3 Impulse withstand voltage | | | Is the panel builder's responsibility. |
| 10.9.4 Testing of enclosures made of insulating material | | | Is the panel builder's responsibility. |
| 10.10 Temperature rise | | | The panel builder is responsible for the temperature rise calculation. Eaton will provide heat dissipation data for the devices. |

| | | | |
|---|---|---|---|
| 10.11 Short-circuit rating | | | Is the panel builder's responsibility. The specifications for the switchgear must be observed. |
| 10.12 Electromagnetic compatibility | | | Is the panel builder's responsibility. The specifications for the switchgear must be observed. |
| 10.13 Mechanical function | | | The device meets the requirements, provided the information in the instruction leaflet (IL) is observed. |

## Technical data ETIM 7.0

Low-voltage industrial components (EG000017) / Control switch (EC002611)

Electric engineering, automation, process control engineering / Low-voltage switch technology / Off-load switch, circuit breaker, control switch / Control switch (ecl@ss10.0.1-27-37-14-14 [ACN998011])

| | | | |
|---|---|---|---|
| Type of switch | | | Level switch |
| Number of poles | | | 3 |
| Max. rated operation voltage Ue AC | | V | 690 |
| Rated permanent current Iu | | A | 20 |
| Number of switch positions | | | 3 |
| With 0 (off) position | | | Yes |
| With retraction in 0-position | | | No |
| Device construction | | | Built-in device |
| Width in number of modular spacings | | | 4 |
| Suitable for ground mounting | | | Yes |
| Suitable for front mounting 4-hole | | | No |
| Suitable for distribution board installation | | | Yes |
| Suitable for intermediate mounting | | | No |
| Complete device in housing | | | No |
| Type of control element | | | Toggle |
| Front shield size | | | Other |
| Degree of protection (IP), front side | | | IP30 |
| Degree of protection (NEMA), front side | | | Other |

## Approvals

| | | | |
|---|---|---|---|
| Product Standards | | | UL 60947-4-1;CSA - C22.2 No. 60947-4-1-14; CSA-C22.2 No. 94; IEC/EN 60947-3; CE marking |
| UL File No. | | | E36332 |
| UL Category Control No. | | | NLRV |
| CSA File No. | | | 12528 |
| CSA Class No. | | | 3211-05 |
| North America Certification | | | UL listed, CSA certified |
| Suitable for | | | Branch circuits, suitable as motor disconnect |
| Degree of Protection | | | IEC: IP30; UL/CSA Type: – |

## Dimensions

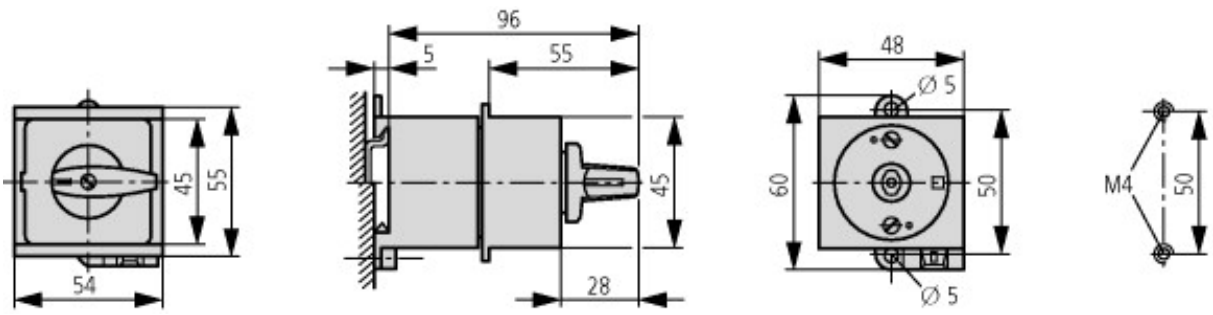

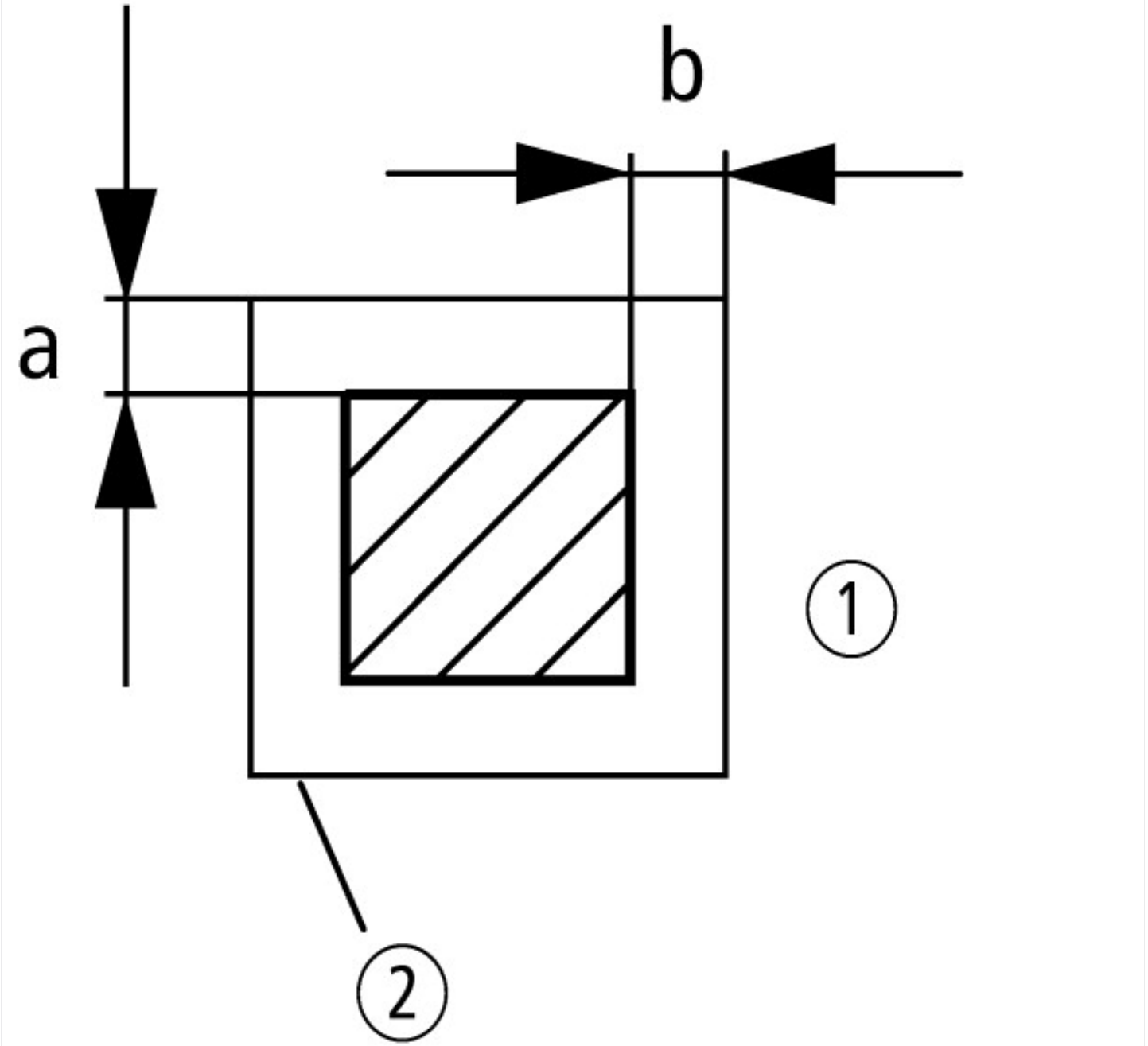


① Mounting clearances a and b: 4 mm
② exposed conductive part (metal)

## Assets (links)

### Declaration of CE Conformity

00003075

### Instruction Leaflets

IL03801006Z2018_04

## Additional product information (links)

| **IL03801006Z (AWA1150-1686) Cam switch: service distribution** | |
|---|---|
| IL03801006Z (AWA1150-1686) Cam switch: service distribution | ftp://ftp.moeller.net/DOCUMENTATION/AWA_INSTRUCTIONS/IL03801006Z2018_04.pdf |
| Display flip catalog page. | http://ecat.moeller.net/flip-cat/?edition=K115A&startpage=81 |
| Technical overview cam switch, switch-disconnector | http://de.ecat.moeller.net/flip-cat/?edition=HPLTEv1&startpage=4.2 |
| System overview cam switch T | http://de.ecat.moeller.net/flip-cat/?edition=HPLTEv1&startpage=4.4 |
| System overview switch-disconnector P | http://de.ecat.moeller.net/flip-cat/?edition=HPLTEv1&startpage=4.6 |
| Key to part numbers Cam switch | http://de.ecat.moeller.net/flip-cat/?edition=HPLTEv1&startpage=4.8 |
| Key to part numbers Switch-disconnector | http://de.ecat.moeller.net/flip-cat/?edition=HPLTEv1&startpage=4.8 |
| Switches for ATEX | http://www.coopercrouse-hinds.eu/en/products/25-ex-safety-and-main-current-switches.html |

| | |
|---|---|
| Ordering form for SOND switches and SOND front plates(DE_EN) | ftp://ftp.moeller.net/DOCUMENTATION/PDF/MZ008005ZU_Orderform_Customized_Switch.pdf |
| Ordering form for SOND switches and SOND front plates(DE_EN) | ftp://ftp.moeller.net/DOCUMENTATION/PDF/MZ008006ZU_Orderform_Customized_Switch.pdf |


© 07/2019 by Eaton Industries GmbH