TVF637



Display size
22"-40"

Max load
55lb (25kg)

tru•vue™ Flat Wall Mount

FOR 22" TO 40" DISPLAYS

The TruVue™ series wall mounts combine ease of installation with viewing flexibility. With TVF637, a low-profile design positions the TV just 0.56" (14mm) from the wall. The Hook-and-Hang™ system offers easy, one-person installation of the TV.

The TVF637's low-profile design allows TVs to be positioned just 0.56" from the wall, perfect for almost any low-profile application.

GET IT RIGHT™

Additional Features

- ☑ Positions TV only 0.56" (14mm) from the wall
- ☑ Low-profile design creates a clean, concealed look
- ☑ Includes necessary wall and TV attachment hardware
- ☑ Accommodates VESA® 100 x 100, 200 x 100 and 200 x 200mm mounting hole patterns
- ☑ Mounts to wood stud, concrete, cinder or breeze block surface
- ☑ TV adaptor plate simply slides into the wall plate for a quick and easy installation
- ☑ Design is UL listed and tested to four times stated load capacity

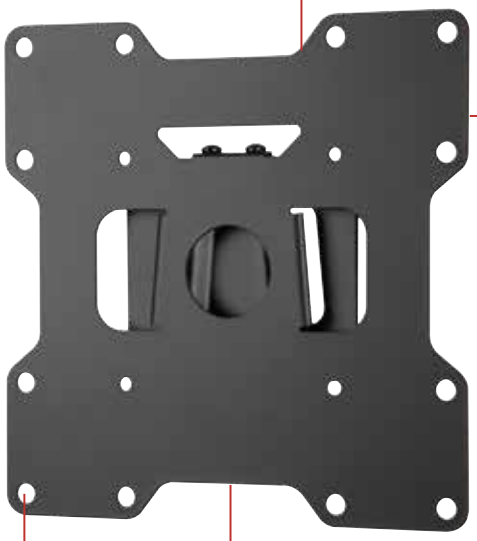

ULTRA HD TV READY

PEERLESS-AV 4X SAFETY TESTED

RoHS



Comes in color packaging with included level, installation hardware and easy to follow instructions.

info@peerless-av.com
peerless-av.com

peerless-AV®

Model Numbers

WARRANTY: Limited 5-year

TVF637	TruVue™ Flat Wall Mount for 22" to 40" Displays

Product Specifications

	DIMENSIONS (W x H x D)	PRODUCT WEIGHT	LOAD CAPACITY	FINISH	AVAILABLE COLORS
TVF637	8.66" x 8.66" x 0.56" (220 x 220 x 14mm)	1.6lb (0.7kg)	55lb (25kg)	Scratch resistant fused epoxy	Matte black

Package Specifications

	PACKAGE SIZE (W x H x D)	PACKAGE SHIP WEIGHT	PACKAGE UPC CODE	PACKAGE CONTENTS	UNITS IN PACKAGE
TVF637	10.83" x 1.81" x 10.79" (275 x 46 x 274mm)	1.9lb (0.9kg)	735029293170	Wall mount, wall and TV installation hardware, level	1

All dimensions = inch (mm)



TOP VIEW

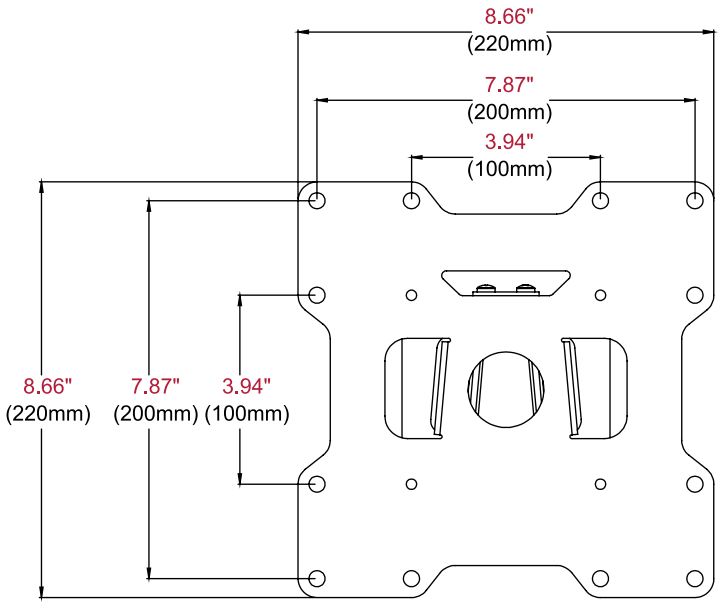

FRONT VIEW

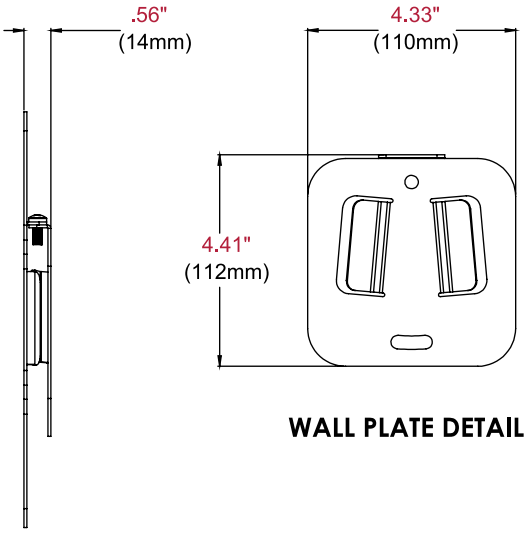

WALL PLATE DETAIL

SIDE VIEW

Architect Specifications

The TruVue™ Flat Wall Mount shall be a Peerless-AV model TVF637 and shall be located where indicated on the plans. Assembly and installation shall be done according to instructions provided by the manufacturer.

Visit peerless-av.com to see the complete line of AV solutions from Peerless-AV, including outdoor displays, wireless, kiosks, digital audio, display mounts, projector mounts, carts/stands, and a full assortment of accessories.

Peerless-AV
2300 White Oak Circle
Aurora, IL 60502 USA

(800) 865-2112
(630) 375-5100
Fax: (800) 359-6500

Peerless-AV Europe
Unit 3 Watford Interchange
Colonial Way, Watford
Herts, WD24 4WP
United Kingdom
+44 (0) 1923 200100
Fax: +44 (0) 1923 200101

Peerless-AV de México
Ave de las Industrias 413
Parque Industrial Escobedo
Escobedo, N.L.,
Mexico 66050
+52 (81) 8384-8300
Fax: +52 (81) 8384-8360

peerless-AV®

LIT-1269

© 2015 Peerless Industries, Inc. Peerless-AV® is a registered trademark and TruVue™ is a trademark of Peerless Industries, Inc. All rights reserved.