TVT646



Display size
32"-50"

Max load
75lb (34kg)

tru•vue™
Universal Tilting Wall Mount

FOR 32" TO 50" DISPLAYS

The TruVue™ series wall mounts combine ease of installation with viewing flexibility. With TVT646, a low-profile design positions the TV just 2.66" (67mm) from the wall. The Hook-and-Hang™ system offers easy, one-person installation of the TV. The Easy-Glide™ adaptors hook onto the wall plate for a quick, simple, and secure installation. Achieve perfect positioning of the TV with the side-to-side adjustment after installation. The +15°/-5° of tool-less tilt allows quick adjustment of the viewing angle without the use of tools. Lock the tilt angle at installation to prevent tampering or moving with the IncreLok™ tilt technology.

The TVT646's adjustable viewing feature provides 15° of forward tilt and 5° backward tilt, creating the most optimal viewing angle.

GET IT RIGHT™

Additional Features

- ☑ Universal mount fits TVs with mounting patterns up to 443 x 405mm (17.46" W x 15.95" H)
- ☑ The low-profile design positions the TV 2.66" (67mm) from the wall creating an ultra-low profile finish perfect for today's ultra-slim TVs
- ☑ Side-to-side adjustment allows for perfect TV positioning
- ☑ +15°/-5° of tool-less tilt allows you to adjust for the perfect viewing angle
- ☑ Mounts to wood studs, concrete, cinder block or metal studs (metal stud accessory required)
- ☑ Installation hardware included
- ☑ Design is UL listed and tested to four times stated load capacity

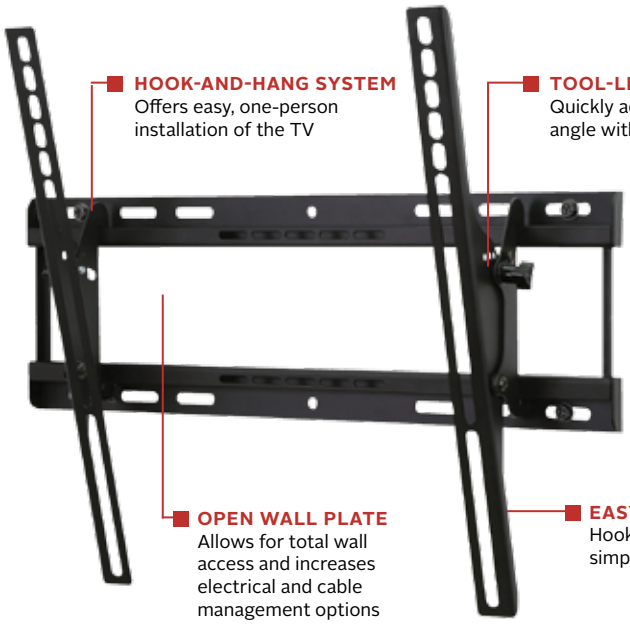

ULTRA HD TV READY

PEERLESS-AV 4X SAFETY TESTED

RoHS



Comes in color packaging with included level, installation hardware and easy to follow instructions.

info@peerless-av.com
peerless-av.com

peerless-AV®

Model Numbers

WARRANTY: Limited 5-year

TVT646	TruVue™ Universal Tilting Wall Mount for 32" to 50" Displays

Product Specifications

	DIMENSIONS (W x H x D)	PRODUCT WEIGHT	LOAD CAPACITY	FINISH	AVAILABLE COLORS
TVT646	20.82" x 16.88" x 2.66"-5.31" (529 x 429 x 68-135mm)	3.9lb (1.8kg)	75lb (34kg)	Scratch resistant fused epoxy	Matte black

Package Specifications

	PACKAGE SIZE (W x H x D)	PACKAGE SHIP WEIGHT	PACKAGE UPC CODE	PACKAGE CONTENTS	UNITS IN PACKAGE
TVT646	20.25" x 7.25" x 2.50" (514 x 184 x 64mm)	5.5lb (2.5kg)	735029293248	Wall plate, universal brackets, mounting and TV attachment hardware, level	1

Accessories

ACC415: 4-pack Metal Stud Fastener Kit
ACC925: Security Fasteners

All dimensions = inch (mm)

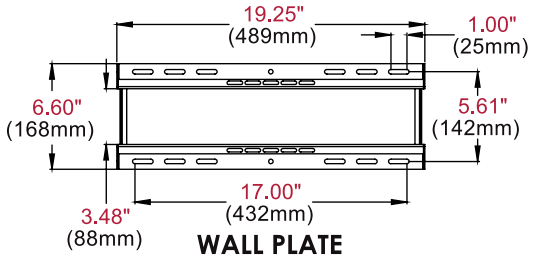

WALL PLATE

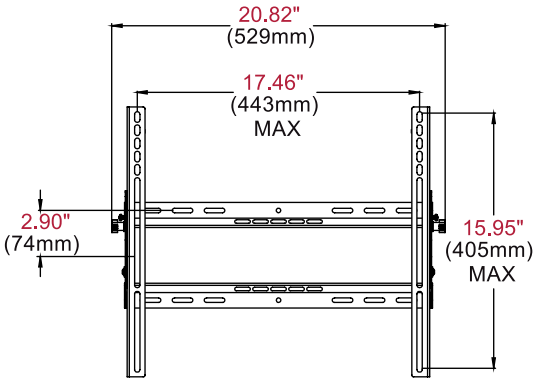

FRONT VIEW

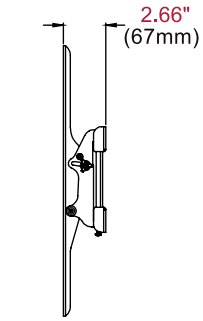

SIDE VIEW

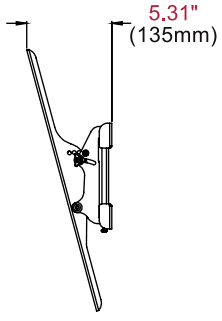

+15°/-5° TILT

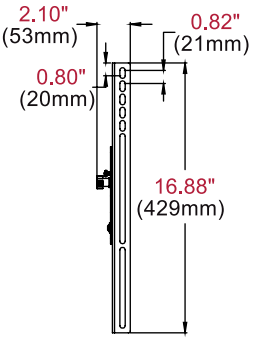

ADAPTOR PLATE

Architect Specifications

The TruVue™ Universal Tilting Wall Mount shall be a Peerless-AV model TVT646 and shall be located where indicated on the plans. Assembly and installation shall be done according to instructions provided by the manufacturer.

Visit peerless-av.com to see the complete line of AV solutions from Peerless-AV, including outdoor displays, wireless, kiosks, digital audio, display mounts, projector mounts, carts/stands, and a full assortment of accessories.

Peerless-AV
2300 White Oak Circle
Aurora, IL 60502 USA

(800) 865-2112
(630) 375-5100
Fax: (800) 359-6500

Peerless-AV Europe
Unit 3 Watford Interchange
Colonial Way, Watford
Herts, WD24 4WP
United Kingdom
+44 (0) 1923 200100
Fax: +44 (0) 1923 200101

Peerless-AV de México
Ave de las Industrias 413
Parque Industrial Escobedo
Escobedo, N.L.,
Mexico 66050
+52 (81) 8384-8300
Fax: +52 (81) 8384-8360

peerless-AV®

LIT-1274 rev.1

© 2015 Peerless Industries, Inc. Peerless-AV® is a registered trademark and TruVue™ is a trademark of Peerless Industries, Inc. All rights reserved.