TVT624



Display size
10"-29"

Max load
25lb (11kg)

tru•vue™ Tilting Wall Mount

FOR 10" TO 29" DISPLAYS

The TruVue™ series wall mounts combine ease of installation with viewing flexibility. With TVT624, a low-profile design positions the TV just 2.00" (51mm) from the wall. The Hook-and-Hang™ system offers easy, one-person installation of the TV. Tilt the TV 15° forward or 5° backward to optimize the TV's viewing angle.

The TVT624's adjustable viewing feature provides 15° of forward tilt and 5° backward tilt, creating the most optimal viewing angle.

GET IT RIGHT™

Additional Features

- ☑ Positions TV only 2.00" (51mm) from the wall
- ☑ Low-profile design creates a clean, concealed look
- ☑ Includes necessary wall and display attachment hardware
- ☑ VESA® 75 x 75 and 100 x 100mm TV mounting hole patterns
- ☑ Mounts to wood stud, concrete, cinder or breeze block
- ☑ TV adaptor plate simply slides into the wall plate for a quick and easy installation
- ☑ Design is UL listed and tested to four times stated load capacity



HOOK-AND-HANG DESIGN
TV can be installed by a single person

LOCKING TILT
TV locks at any angle with adjustment screws

FLEXIBLE MOUNTING LOCATIONS
Mounts to wood stud, concrete, cinder or breeze block

VESA® COMPATIBLE
Accommodates 75 and 100 mm mounting pattern



Comes in color packaging with included level, installation hardware and easy to follow instructions.

ULTRA HD TV READY

PEERLESS-AV 4X SAFETY TESTED

RoHS

info@peerless-av.com
peerless-av.com

peerless-AV®

Model Numbers

WARRANTY: Limited 5-year

TVT624	TruVue™ Tilting Wall Mount for 10" to 29" Displays

Product Specifications

	DIMENSIONS (W x H x D)	PRODUCT WEIGHT	LOAD CAPACITY	FINISH	AVAILABLE COLORS
TVT624	4.41" x 4.41" x 2.00"-2.39" (112 x 112 x 51-61mm)	1.1lb (0.5kg)	25lb (11kg)	Scratch resistant fused epoxy	Matte black

Package Specifications

	PACKAGE SIZE (W x H x D)	PACKAGE SHIP WEIGHT	PACKAGE UPC CODE	PACKAGE CONTENTS	UNITS IN PACKAGE
TVT624	5.31" x 2.83" x 6.69" (135 x 72 x 170mm)	1.3lb (0.6kg)	735029293224	Wall mount, wall and TV installation hardware, level	1

All dimensions = inch (mm)

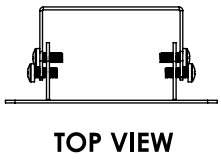

TOP VIEW

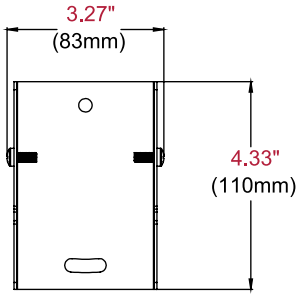

WALL PLATE DETAIL

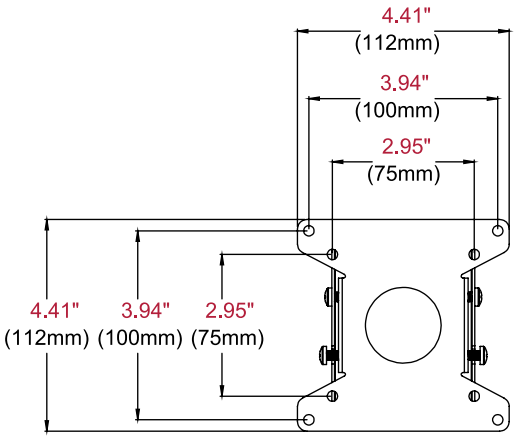

FRONT VIEW

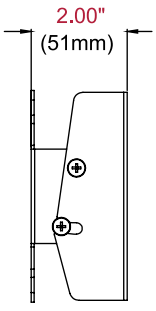

SIDE VIEW

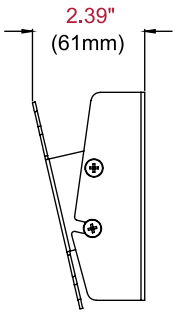

SIDE VIEW
+15°/-5° TILT

Architect Specifications

The TruVue™ Tilting Wall Mount shall be a Peerless-AV model TVT624 and shall be located where indicated on the plans. Assembly and installation shall be done according to instructions provided by the manufacturer.

Visit peerless-av.com to see the complete line of AV solutions from Peerless-AV, including outdoor displays, wireless, kiosks, digital audio, display mounts, projector mounts, carts/stands, and a full assortment of accessories.

Peerless-AV
2300 White Oak Circle
Aurora, IL 60502 USA

(800) 865-2112
(630) 375-5100
Fax: (800) 359-6500

Peerless-AV Europe
Unit 3 Watford Interchange
Colonial Way, Watford
Herts, WD24 4WP
United Kingdom
+44 (0) 1923 200100
Fax: +44 (0) 1923 200101

Peerless-AV de México
Ave de las Industrias 413
Parque Industrial Escobedo
Escobedo, N.L.,
Mexico 66050
+52 (81) 8384-8300
Fax: +52 (81) 8384-8360

LIT-1272

© 2015 Peerless Industries, Inc. Peerless-AV® is a registered trademark and TruVue™ is a trademark of Peerless Industries, Inc. All rights reserved.