T490s and X390
Hardware Maintenance Manual



Note: Before using this information and the product it supports, be sure to read the general information under Appendix A “Notices” on page 107.

Second Edition (April 2020)

© Copyright Lenovo 2020.

LIMITED AND RESTRICTED RIGHTS NOTICE: If data or software is delivered pursuant to a General Services Administration “GSA” contract, use, reproduction, or disclosure is subject to restrictions set forth in Contract No. GS-35F-05925.

Contents

About this manual iii

Chapter 1. Safety information 1

General safety 1
Electrical safety 1
Safety inspection guide 3
Handling devices that are sensitive to electrostatic discharge 3
Grounding requirements 4
Safety notices (multilingual translations) 4

Chapter 2. Important service information 21

Strategy for replacing FRUs 21
Strategy for replacing a solid-state drive . . . 21
Important notice for replacing a system board 22
How to use error message 22
Strategy for replacing FRUs for CTO, special-bid, and standard models. 22
Product definition 22
FRU identification 22

Chapter 3. General checkout 25

What to do first 25
Checkout guide 26
Diagnosing problems 26
Quick test programs 27
UEFI diagnostic program 27
Bootable diagnostic programs 27
Power system checkout 28
Checking the ac power adapter 29
Checking the built-in battery and operational charging 29
Checking the coin-cell battery 29

Chapter 4. Related service information 31

Recovery information for the Windows 10 operating system 31
Resetting your computer 31
Using advanced startup options 31
Recovering your operating system if Windows 10 fails to start 32
Creating and using a recovery USB drive 32
Passwords. 33
Power-on password 33
Hard disk password 33
Supervisor password 33
How to remove the power-on password . . . 34
How to remove the hard disk password. . . . 34
Power management 35
Sleep mode 35
Hibernation mode 35
Symptom-to-FRU index 36
Numeric error codes 36
Error messages 37
Beep errors. 38
No-beep symptoms 39
LCD-related symptoms 40
Intermittent problems. 41
Undetermined problems 41

Chapter 5. Special keys 43

Chapter 6. Locations 47

Locating computer controls, connectors, and indicators 47
Front 47
Base 48
Left 49
Right 49
Rear 50
Bottom 51
Locating FRUs and CRUs 51
Major FRUs and CRUs 52
LCD FRUs and CRUs. 58
Miscellaneous parts 60
Connector and cable guide 60
Looking up FRU information 63

Chapter 7. FRU replacement notices 65

Screw notices 65
Retaining serial numbers 66
Restoring the serial number of the system unit 66
Retaining the UUID. 66
Reading or writing the ECA information 67

Chapter 8. Removing or replacing a FRU. 69

General guidelines. 69
Before servicing the computer 69
Disabling the built-in battery 69
Removing the nano-SIM-card and microSD-card tray 70

© Copyright Lenovo 2020

1010 Keyboard (for ThinkPad X390 only) 70
1020 Base cover assembly 72
1030 M.2 solid-state drive, bracket, and thermal pad 73
1040 Wireless WAN card 75
1050 Docking-station-connector bracket 76
1060 Thermal fan assembly 76
1070 USB-card cable and USB card. 77
1080 Built-in battery 79
1090 Coin-cell battery 81
1100 Trackpad cable. 81
1110 Trackpad 82
1120 NFC card 84
1130 Speaker assembly 85
1140 Fingerprint-reader-and-smart-card-reader cable, fingerprint-reader cable, and smart-card-reader cable (for ThinkPad T490s only) 87
1150 Fingerprint-reader bracket and fingerprint reader 88
1160 Smart card reader or dummy smart card reader 89
1170 System board 91
1180 Power-card cable and power card 95
1190 LCD unit 96
1200 Keyboard assembly (for ThinkPad T490s) or Keyboard bezel assembly (for ThinkPad X390) . . . 98
2010 LCD bezel cover and LCD bezel 98
2020 LCD hinges 99
2030 LCD panel and LCD cable 100
2040 Camera and microphone module and aluminum foil (for ThinkPad T490s only) 100
2050 Camera-and-microphone-module cable and antenna kit. 101
2060 LCD cover assembly. 105

Appendix A. Notices 107

Appendix B. Abbreviation table 109

About this manual

This manual contains service and reference information for the following ThinkPad® products:

ThinkPad T490s	Machine types (MT) 20NX and 20NY
ThinkPad X390	Machine types (MT) 20Q0 and 20Q1

Use this manual along with the advanced diagnostic tests to troubleshoot problems.

Important:

This manual is intended only for trained service technicians who are familiar with ThinkPad products. Use this manual along with the advanced diagnostic tests to troubleshoot problems effectively.
Before servicing a ThinkPad product, be sure to read all the information under Chapter 1 “Safety information” on page 1 and Chapter 2 “Important service information” on page 21.

© Copyright Lenovo 2020

Chapter 1. Safety information

This chapter presents following safety information that you need to be familiar with before you service a ThinkPad notebook computer.

- “General safety” on page 1
- “Electrical safety” on page 1
- “Safety inspection guide” on page 3
- “Handling devices that are sensitive to electrostatic discharge” on page 3
- “Grounding requirements” on page 4
- “Safety notices (multilingual translations)” on page 4

General safety

Follow these rules to ensure general safety:

- Observe good housekeeping in the area of the machines during and after maintenance.
- When lifting any heavy object:
  1. Ensure that you can stand safely without slipping.
  2. Distribute the weight of the object equally between your feet.
  3. Use a slow lifting force. Never move suddenly or twist when you attempt to lift.
  4. Lift by standing or by pushing up with your leg muscles; this action removes the strain from the muscles in your back. Do not attempt to lift any object that weighs more than 16 kg (35 lb) or that you think is too heavy for you.
- Do not perform any action that causes hazards to the customer, or that makes the equipment unsafe.
- Before you start the machine, ensure that other service technicians and the customer's personnel are not in a hazardous position.
- Place removed covers and other parts in a safe place, away from all personnel, while you are servicing the machine.
- Keep your tool case away from walk areas so that other people will not trip over it.
- Do not wear loose clothing that can be trapped in the moving parts of a machine. Ensure that your sleeves are fastened or rolled up above your elbows. If your hair is long, fasten it.
- Insert the ends of your necktie or scarf inside clothing or fasten it with a nonconductive clip, about 8 centimeters (3 inches) from the end.
- Do not wear jewelry, chains, metal-frame eyeglasses, or metal fasteners for your clothing, because metal objects are good electrical conductors.
- Wear safety glasses when you are hammering, drilling, soldering, cutting wire, attaching springs, using solvents, or working in any other conditions that might be hazardous to your eyes.
- After service, reinstall all safety shields, guards, labels, and ground wires. Replace any safety device that is worn or defective.
- Reinstall all covers correctly before returning the machine to the customer.
- Fan louvers on the machine help to prevent overheating of internal components. Do not obstruct fan louvers or cover them with labels or stickers.

Electrical safety

Observe the following rules when working on electrical equipment.

© Copyright Lenovo 2020

Important:

- Use only approved tools and test equipment. Some hand tools have handles covered with a soft material that does not insulate you when working with live electrical currents.
- Many customers have, near their equipment, rubber floor mats that contain small conductive fibers to decrease electrostatic discharges (ESD). Do not use this type of mat to protect yourself from electrical shock.
- Find the room emergency power-off (EPO) switch, disconnecting switch, or electrical outlet. If an electrical accident occurs, you can then operate the switch or unplug the power cord quickly.
- Do not work alone under hazardous conditions or near equipment that has hazardous voltages.
- Disconnect all power before:
  - Performing a mechanical inspection
  - Working near power supplies
  - Removing or installing main units
- Before you start to work on the machine, unplug the power cord. If you cannot unplug it, ask the customer to power off the wall box that supplies power to the machine, and to lock the wall box in the off position.
- If you need to work on a machine that has exposed electrical circuits, observe the following precautions:
  - Ensure that another person, familiar with the power-off controls, is near you. That person must be there to switch off the power, if necessary.
  - Use only one hand when working with powered-on electrical equipment; keep the other hand in your pocket or behind your back.

    CAUTION:
    An electrical shock can occur only when there is a complete circuit. By observing the above rule, you may prevent a current from passing through your body.
  - When using testers, set the controls correctly and use the approved probe leads and accessories for that tester.
  - Stand on suitable rubber mats (obtained locally, if necessary) to insulate you from grounds such as metal floor strips and machine frames.

  Observe the special safety precautions when you work with very high voltages. Instructions for these precautions are in the safety sections of maintenance information. Use extreme care when measuring high voltages.
- Regularly inspect and maintain your electrical hand tools for safe operational condition.
- Do not use worn or broken tools and testers.
- Never assume that power has been disconnected from a circuit. First, check that it has been powered off.
- Always look carefully for possible hazards in your work area. Examples of these hazards are moist floors, nongrounded power extension cables, power surges, and missing safety grounds.
- Do not touch live electrical circuits with the reflective surface of a plastic dental mirror. The surface is conductive; such touching can cause personal injury and machine damage.
- Do not service the following parts with the power on:
  - Power supply units
  - Pumps
  - Blowers and fans
  - Motor generators
  - Units similar to those listed above

  This practice ensures correct grounding of the units.
- If an electrical accident occurs:
  - Use caution; do not become a victim yourself.
  - Switch off power.
  - Send another person to get medical aid.

Safety inspection guide

The purpose of this inspection guide is to assist you in identifying potentially unsafe conditions. As each machine was designed and built, required safety items were installed to protect users and service technicians from injury. This guide addresses only those items. You should use good judgment to identify potential safety hazards due to attachment of non-ThinkPad features or options not covered by this inspection guide.

If any unsafe conditions are present, you must determine how serious the apparent hazard could be and whether you can continue without first correcting the problem.

Consider these conditions and the safety hazards they present:

- Electrical hazards, especially primary power (primary voltage on the frame can cause serious or fatal electrical shock)
- Explosive hazards, such as a damaged CRT face or a bulging capacitor
- Mechanical hazards, such as loose or missing hardware

To determine whether there are any potentially unsafe conditions, use the following checklist at the beginning of every service task. Begin the checks with the power off, and the power cord disconnected.

Checklist:

1. Check exterior covers for damage (loose, broken, or sharp edges).
2. Turn off the computer. Disconnect the power cord.
3. Check the power cord for:
   a. A third-wire ground connector in good condition. Use a meter to measure third-wire ground continuity for 0.1 ohm or less between the external ground pin and the frame ground.
   b. The power cord should be the authorized type specified for your computer. Go to: https://support.lenovo.com/partslookup.
   c. Insulation must not be frayed or worn.
4. Check for cracked or bulging batteries.
5. Remove the cover.
6. Check for any obvious non-ThinkPad alterations. Use good judgment as to the safety of any non-ThinkPad alterations.
7. Check inside the unit for any obvious unsafe conditions, such as metal filings, contamination, water or other liquids, or signs of fire or smoke damage.
8. Check for worn, frayed, or pinched cables.
9. Check that the power-supply cover fasteners (screws or rivets) have not been removed or tampered with.

Handling devices that are sensitive to electrostatic discharge

Any computer part containing transistors or integrated circuits (ICs) should be considered sensitive to electrostatic discharge (ESD). ESD damage can occur when there is a difference in charge between objects. Protect against ESD damage by equalizing the charge so that the machine, the part, the work mat, and the person handling the part are all at the same charge.

Notes:

1. Use product-specific ESD procedures when they exceed the requirements noted here.

2. Ensure that the ESD protective devices you use have been certified (ISO 9000) as fully effective.

When handling ESD-sensitive parts:

- Keep the parts in protective packages until they are inserted into the product.
- Avoid contact with other people.
- Wear a grounded wrist strap against your skin to eliminate static on your body.
- Prevent the part from touching your clothing. Most clothing is insulative and retains a charge even when you are wearing a wrist strap.
- Use a grounded work mat to provide a static-free work surface. The mat is especially useful when handling ESD-sensitive devices.
- Select a grounding system, such as those listed below, to provide protection that meets the specific service requirement.

  Note: The use of a grounding system to guard against ESD damage is desirable but not necessary.

  – Attach the ESD ground clip to any frame ground, ground braid, or green-wire ground.
  – When working on a double-insulated or battery-operated system, use an ESD common ground or reference point. You can use coax or connector-outside shells on these systems.
  – Use the round ground prong of the ac plug on ac-operated computers.

Grounding requirements

Electrical grounding of the computer is required for operator safety and correct system function. Proper grounding of the electrical outlet can be verified by a certified electrician.

Safety notices (multilingual translations)

The safety notices in this section are provided in the following languages:
- English
- Arabic
- Brazilian Portuguese
- French
- German
- Hebrew
- Japanese
- Korean
- Spanish
- Traditional Chinese



DANGER

Before the computer is powered on after FRU replacement, make sure that all screws, springs, and other small parts are in place and are not left loose inside the computer. Verify this by shaking the computer and listening for rattling sounds. Metallic parts or metal flakes can cause electrical short circuits.



DANGER

Some standby batteries contain a small amount of nickel and cadmium. Do not disassemble a standby battery, recharge it, throw it into fire or water, or short-circuit it. Dispose of the battery as required by local ordinances or regulations. Use only the battery in the appropriate parts listing. Use of an incorrect battery can result in ignition or explosion of the battery.



DANGER

The battery pack contains small amounts of nickel. Do not disassemble it, throw it into fire or water, or short-circuit it. Dispose of the battery pack as required by local ordinances or regulations. Use only the battery in the appropriate parts listing when replacing the battery pack. Use of an incorrect battery can result in ignition or explosion of the battery.



DANGER

The lithium battery can cause a fire, an explosion, or a severe burn. Do not recharge it, remove its polarized connector, disassemble it, heat it above 100°C (212°F), incinerate it, or expose its cell contents to water. Dispose of the battery as required by local ordinances or regulations. Use only the battery in the appropriate parts listing. Use of an incorrect battery can result in ignition or explosion of the battery.



DANGER

If the LCD breaks and the fluid from inside the LCD gets into your eyes or on your hands, immediately wash the affected areas with water for at least 15 minutes. Seek medical care if any symptoms from the fluid are present after washing.



DANGER

To avoid shock, do not remove the plastic cover that protects the lower part of the inverter card.



DANGER

Though the main batteries have low voltage, a short-circuited or grounded battery can produce enough current to burn personnel or combustible materials.



DANGER

Unless hot swap is allowed for the FRU being replaced, do as follows before removing it: power off the computer, unplug all power cords from electrical outlets, remove the battery pack, and disconnect any interconnecting cables.



خطر

قبل اعادة تشغيل الحاسب بعد الانتهاء من استبدال FRU، تأكد من أنه قد تم اعادة كل من المسامير و السوست وكل الأجزاء الصغيرة الأخرى في أماكنهم ولم يتم فقدهم داخل الحاسب.
ويمكن التحقق من ذلك عن طريق هز الحاسب والاستماع لأي صوت صاخب يصدر منه.
قد تؤدي الأجزاء أو الرقائق المعدنية الى حدوث دائرة قصر.



خطر

تحتوي بعض البطاريات الاحتياطية على كمية صغيرة من مادتي النيكل والكادميوم. لا تقم بفك أو اعادة شحن البطارية الاحتياطية ولا تقم أيضا بالقاءها في النار أو الماء ولا تتسبب في احداث دائرة قصر بها. قم بالتخلص من البطارية كما هو موضح في القوانين المحلية.
استخدم نوع البطارية المحدد والذي يوصى باستخدامه. حيث أنه قد يؤدي استخدام نوع بطارية غير صحيح الى اشتعالها أو انفجارها.



خطر

تحتوي حزمة البطارية على كمية صغيرة من مادة النيكل. لا تقم بفكها أو القاءها في النار أو الماء ولا تتسبب في احداث دائرة قصر بها. تخلص من حزمة البطارية وفقا لما هو موضح في القوانين المحلية. قم، عند استبدال حزمة البطارية، باستخدام الأنواع المحددة فقط والتي يوصى باستخدامها. حيث أنه قد يؤدي استخدام نوع بطارية غير صحيح الى اشتعالها أو انفجارها.



خطر

قد تتسبب بطارية الليثيوم في حدوث حريق أو انفجار أو حدوث حروق شديدة. لا تقم باعادة شحن البطارية أو ازالة موصل الاستقطاب الخاص بها ولا تحاول أيضا فكها أو تسخينها لأكثر من ١٠٠ درجة منوية (٢١٢ فهرنهايت) أو حرقها أو تعريض محتويات الخانة الخاصة بها للماء. قم بالتخلص من البطارية وفقا لما هو موضح في القوانين المحلية. استخدم نوع البطارية المحدد والذي يوصى باستخدامه. حيث أنه قد يؤدي استخدام نوع بطارية غير صحيح الى اشتعالها أو انفجارها.



خطر

اذا ما انكسرت شاشة LCD ولامس السائل الداخلي عينيك أو يديك، قم في الحال بغسلهما بالماء لمدة لا تقل عن ١٥ دقيقة. اذا ما وجدت أي أعراض بعد الغسل اطلب عندئذ المساعدة الطبية.



خطر

لتجنب التعرض لأي صدمات، لا تقم بازالة الغطاء البلاستيكي الذي يحمي الجزء الأسفل من بطاقة العاكس.



خطر

على الرغم من أن البطاريات الرئيسية يكون لها جهد منخفض، الا أنه قد تقوم البطاريات التي حدث قصور بها أو التي تم توصيلها أرضيا باصدار تيار يكفي لحدوث حروق للأفراد أو تعرض المواد القابلة للاشتعال للحريق.



خطر

ما لم يتم السماح بالتبديل الفوري لأي FRU الجاري استبداله بدون ضرورة اغلاق النظام، قم بتنفيذ ما يلي قبل ازالته. قم بايقاف تشغيل الحاسب ونزع كل أسلاك الطاقة من المخارج الكهربائية وقم أيضا بازالة حزمة البطارية ثم قم بفصل أي كابلات متصلة.



PERIGO

Antes de ligar o computador após a substituição da FRU, certifique-se de que todos os parafusos, molas e outras peças pequenas estejam no lugar e não estejam soltos dentro do computador. Verifique isso sacudindo o computador e procurando ouvir sons de peças soltas. Peças metálicas ou lascas de metal podem causar curto-circuito.



PERIGO

Algumas baterias reserva contêm uma pequena quantidade de níquel e cádmio. Não desmonte uma bateria reserva, recarregue-a, jogue-a no fogo ou na água, ou deixe-a entrar em curto-circuito. Descarte a bateria conforme requerido pelas leis ou regulamentos locais. Use somente a bateria nas partes listadas apropriadas. O uso de uma bateria incorreta pode resultar em combustão ou explosão da bateria.



PERIGO

O pacote da bateria contém uma pequena quantidade de níquel. Não o desmonte, jogue-o no fogo ou na água, ou deixe-o entrar em curto-circuito. Descarte o pacote da bateria conforme requerido pelas leis ou regulamentos locais. Use somente a bateria nas partes listadas apropriadas ao substituir o pacote da bateria. O uso de uma bateria incorreta pode resultar em combustão ou explosão da bateria.



PERIGO

A bateria de lítio pode causar incêndio, explosão ou graves queimaduras. Não a recarregue, remova seu conector polarizado, desmonte-a, aqueça-a acima de 100°C (212°F), incinere-a, ou exponha o conteúdo de sua célula à água. Descarte a bateria conforme requerido pelas leis ou regulamentos locais. Use somente a bateria nas partes listadas apropriadas. O uso de uma bateria incorreta pode resultar em combustão ou explosão da bateria.



PERIGO

Se o LCD quebrar e o fluido de dentro dele entrar em contato com seus olhos ou com suas mãos, lave as áreas afetadas imediatamente com água durante pelo menos 15 minutos. Procure cuidados médicos se algum sintoma causado pelo fluido surgir após a lavagem.



PERIGO

Para evitar choque elétrico, não remova a capa plástica que protege a parte inferior da placa inversora.



PERIGO

Embora as principais baterias possuam baixa voltagem, uma bateria em curto-circuito ou aterrada pode produzir corrente o bastante para queimar materiais de pessoal ou inflamáveis.



PERIGO

A menos que uma hot swap seja permitida para a FRU que está sendo substituída, faça o seguinte antes de removê-la: desligue o computador, desconecte todos os cabos de energia das tomadas, remova o pacote de baterias e desconecte quaisquer cabos de interconexão.



DANGER

Avant de remettre l'ordinateur sous tension après remplacement d'une unité en clientèle, vérifiez que tous les ressorts, vis et autres pièces sont bien en place et bien fixées. Pour ce faire, secouez l'unité et assurez-vous qu'aucun bruit suspect ne se produit. Des pièces métalliques ou des copeaux de métal pourraient causer un court-circuit.



DANGER

Certaines batteries de secours contiennent du nickel et du cadmium. Ne les démontez pas, ne les rechargez pas, ne les exposez ni au feu ni à l'eau. Ne les mettez pas en court-circuit. Pour les mettre au rebut, conformez-vous à la réglementation en vigueur. Lorsque vous remplacez la pile de sauvegarde ou celle de l'horloge temps réel, veillez à n'utiliser que les modèles cités dans la liste de pièces détachées adéquate. Une batterie ou une pile inappropriée risque de prendre feu ou d'exploser.



DANGER

La batterie contient du nickel. Ne la démontez pas, ne l'exposez ni au feu ni à l'eau. Ne la mettez pas en court-circuit. Pour la mettre au rebut, conformez-vous à la réglementation en vigueur. Lorsque vous remplacez la batterie, veillez à n'utiliser que les modèles cités dans la liste de pièces détachées adéquate. En effet, une batterie inappropriée risque de prendre feu ou d'exploser.



DANGER

La pile de sauvegarde contient du lithium. Elle présente des risques d'incendie, d'explosion ou de brûlures graves. Ne la rechargez pas, ne retirez pas son connecteur polarisé et ne la démontez pas. Ne l'exposez pas à une temperature supérieure à 100°C, ne la faites pas brûler et n'en exposez pas le contenu à l'eau. Mettez la pile au rebut conformément à la réglementation en vigueur. Une pile inappropriée risque de prendre feu ou d'exploser.



DANGER

Si le panneau d'affichage à cristaux liquides se brise et que vous recevez dans les yeux ou sur les mains une partie du fluide, rincez-les abondamment pendant au moins quinze minutes. Consultez un médecin si des symptômes persistent après le lavage.



DANGER

Afin d'éviter tout risque de choc électrique, ne retirez pas le cache en plastique protégeant la partie inférieure de la carte d'alimentation.



DANGER

Bien que le voltage des batteries principales soit peu élevé, le court-circuit ou la mise à la masse d'une batterie peut produire suffisamment de courant pour brûler des matériaux combustibles ou causer des brûlures corporelles graves.



DANGER

Si le remplacement à chaud n'est pas autorisé pour l'unité remplaçable sur site que vous remplacez, procédez comme suit avant de retirer l'unité : mettez l'ordinateur hors tension, débranchez tous les cordons d'alimentation des prises de courant, retirez le bloc de batterie et déconnectez tous les câbles d'interconnexion.



VORSICHT

Bevor nach einem FRU-Austausch der Computer wieder angeschlossen wird, muß sichergestellt werden, daß keine Schrauben, Federn oder andere Kleinteile fehlen oder im Gehäuse vergessen wurden. Der Computer muß geschüttelt und auf Klappergeräusche geprüft werden. Metallteile oder-splitter können Kurzschlüsse erzeugen.



VORSICHT

Die Bereitschaftsbatterie, die sich unter dem Diskettenlaufwerk befindet, kann geringe Mengen Nickel und Cadmium enthalten. Sie darf nur durch die Verkaufsstelle oder den IBM Kundendienst ausgetauscht werden. Sie darf nicht zerlegt, wiederaufgeladen, kurzgeschlossen, oder Feuer oder Wasser ausgesetzt werden. Die Batterie kann schwere Verbrennungen oder Verätzungen verursachen. Bei der Entsorgung die örtlichen Bestimmungen für Sondermüll beachten. Beim Ersetzen der Bereitschafts-oder Systembatterie nur Batterien des Typs verwenden, der in der Ersatzteilliste aufgeführt ist. Der Einsatz falscher Batterien kann zu Entzündung oder Explosion führen.



VORSICHT

Akkus enthalten geringe Mengen von Nickel. Sie dürfen nicht zerlegt, wiederaufgeladen, kurzgeschlossen, oder Feuer oder Wasser ausgesetzt werden. Bei der Entsorgung die örtlichen Bestimmungen für Sondermüll beachten. Beim Ersetzen der Batterie nur Batterien des Typs verwenden, der in der Ersatzteilliste aufgeführt ist. Der Einsatz falscher Batterien kann zu Entzündung oder Explosion führen.



VORSICHT

Die Systembatterie ist eine Lithiumbatterie. Sie kann sich entzünden, explodieren oder schwere Verbrennungen hervorrufen. Batterien dieses Typs dürfen nicht aufgeladen, zerlegt, über 100°C erhitzt oder verbrannt werden. Auch darf ihr Inhalt nicht mit Wasser in Verbindung gebracht oder der zur richtigen Polung angebrachte Verbindungsstecker entfernt werden. Bei der Entsorgung die örtlichen Bestimmungen für Sondermüll beachten. Beim Ersetzen der Batterie nur Batterien des Typs verwenden, der in der Ersatzteilliste aufgeführt ist. Der Einsatz falscher Batterien kann zu Entzündung oder Explosion führen.



VORSICHT

Die Leuchtstoffröhre im LCD-Bildschirm enthält Quecksilber. Bei der Entsorgung die örtlichen Bestimmungen für Sondermüll beachten. Der LCD-Bildschirm besteht aus Glas und kann zerbrechen, wenn er unsachgemäß behandelt wird oder der Computer auf den Boden fällt. Wenn der Bildschirm beschädigt ist und die darin befindliche Flüssigkeit in Kontakt mit Haut und Augen gerät, sollten die betroffenen Stellen mindestens 15 Minuten mit Wasser abgespült und bei Beschwerden anschließend ein Arzt aufgesucht werden.



VORSICHT

Aus Sicherheitsgründen die Kunststoffabdeckung, die den unteren Teil der Spannungswandlerplatine umgibt, nicht entfernen.



VORSICHT

Obwohl Hauptbatterien eine niedrige Spannung haben, können sie doch bei Kurzschluß oder Erdung genug Strom abgeben, um brennbare Materialien zu entzünden oder Verletzungen bei Personen hervorzurufen.



VORSICHT

Wenn ein Austausch der FRU bei laufendem Betrieb nicht erlaubt ist, gehen Sie beim Austausch der FRU wie folgt vor: Schalten Sie den Computer aus, ziehen Sie alle Netzkabel von den Netzsteckdosen ab, entfernen Sie den Akku und ziehen Sie alle miteinander verbundenen Kabel ab.



סכנה

לפני הפעלת המחשב לאחר החלפת FRU יש לוודא שכל הברגים, הקפיצים, וחלקים קטנים אחרים נמצאים במקומם ואינם חופשיים לזוז בתוך המחשב. כדי לוודא זאת, יש לטלטל את המחשב ולהקשיב לגילוי קולות שקשוק. חלקי או שבבי מתכת עלולים לגרום לקצרים חשמליים.



סכנה

סוללות המתנה מסוימות מכילות כמות קטנה של ניקל וקדמיום. אין לפרק סוללת המתנה, לטעון אותה מחדש, להשליך אותה לאש או למים או לקצר אותה. יש לסלק את הסוללה כנדרש על ידי התקנות והחוקים המקומיים. יש להשתמש רק בסוללה המופיעה ברשימת החלקים המתאימה. שימוש בסוללה לא מתאימה עלול לגרום להצתה או התפוצצות של הסוללה.



סכנה

מארז הסוללה מכיל כמות קטנה של ניקל וקדמיום. אין לפרק את מארז הסוללה, להשליך אותו לאש או למים או לקצר אותו. יש לסלק את מארז הסוללה כנדרש על ידי התקנות והחוקים המקומיים. יש להשתמש רק בסוללה המופיעה ברשימת החלקים המתאימה בזמן החלפת מארז הסוללה. שימוש בסוללה לא מתאימה עלול לגרום להצתה או התפוצצות של הסוללה.



סכנה

סוללת הליתיום עלולה לגרום לשריפה, להתפוצצות או לכוויות קשות. אין לטעון אותה מחדש, לסלק את המחבר המקוטב שלה, לפרק אותה או לחמם אותה לטמפרטורה העולה על 100 מעלות צלזיוס. אין לשרוף את הסוללה ואין לחשוף את תוכן התא למים. יש לסלק את הסוללה כנדרש בתקנות ובחוקים המקומיים. יש להשתמש רק בסוללה המופיעה ברשימת החלקים המתאימים. שימוש בסוללה אחרת עלול לגרום לסכנת שריפה או התפוצצות.



סכנה

אם מסך תגביש הנוזלי (LCD) נשבר והנוזל מתוך המסך בא במגע עם עיניכם או ידיכם, שטפו את האזורים הנגועים מיד במים במשך 15 דקות לפחות. פנו לקבלת עזרה רפואית אם תסמינים הנובעים מהמגע עם הנוזל נמשכים לאחר השטיפה.



סכנה

כדי למנוע התחשמלות, אין להסיר את מכסה הפלסטיק המגן על חלקו התחתון של הכונן הקשיח.



סכנה

אף שהסוללות הראשיות הן בעלות מתח נמוך, סוללה מקוצרת או מוארקת עלולה להפיק זרם מספיק לגרימת כוויות או להצתת חומרים דליקים.

סכנה

אלא אם כן מותרת יהחלפה חמה׳ של ה-FRU המוחלף, פעלו כדלהלן לפני הסרתו:
כבו את המחשב, נתקו את כל כבלי החשמל מהשקעים, הוציאו את מארז הסוללות ונתקו את כל הכבלים המחוברים.

危険

FRU の交換後、 ThinkPad の電源を入れる前に、ねじ、バネ、その他の小さな部品がすべて正しい位置にあり、また ThinkPad の内部で緩んでいないことを確認してください。
これを確認するには、 ThinkPad を振って、カチャカチャと音がしないか確かめます。金属部品や金属破片はショートの原因になることがあります。

危険

予備バッテリーの中には少量のニッケルとカドミウムが含まれているものがあります。したがって、予備バッテリーの分解、再充電、火または水の中への投棄、またはショートさせることは決して行わないでください。バッテリーを廃棄する場合は地方自治体の条例に従ってください。適切なパーツ・リストにあるバッテリーだけを使用してください。誤ったバッテリーを使用すると、バッテリーが発火したり、爆発したりすることがあります。

危険

バッテリー・パックには少量のニッケルが含まれています。バッテリー・パックを分解したり、火または水の中に投げ込んだり、ショートさせないでください。バッテリー・パックの廃棄にあたっては、地方自治体の条例または規則に従ってください。バッテリー・パックを交換するときは、適切なパーツ・リストにあるバッテリーだけを使用してください。誤ったバッテリーを使用すると、バッテリーが発火したり、爆発したりすることがあります。

危険

リチウム・バッテリーは、火災、爆発、または重症のやけどを引き起こすことがあります。バックアップ・バッテリーの充電、その極性コネクターの取り外し、バッテリー本体の分解、
100 ℃ (212 ˚F) 以上への加熱、焼却、電池の中身を水に浸すことはしないでください。バッテリーを廃棄する場合は地方自治体の条例に従ってください。適切なパーツ・リストにあるバッテリーだけを使用してください。誤ったバッテリーを使用すると、バッテリーが発火したり、爆発したりすることがあります。

危険

LCD が破損し、 LCD の中の液体が目に入ったり、手に触れたりした場合は、液体が触れた部分を少なくとも 15 分間洗い流してください。洗い流した後に、液体によって何らかの症状が現れた場合は、医師の治療を受けてください。



危険

感電を防ぐため、インバーター・カードの下部を保護しているプラスチック・カバーを外さないでください。



危険

メイン・バッテリーの電圧は低くても、ショートしたり、接地したバッテリーが、作業者にやけどを負わせたり、可燃物を燃やすだけの電流を発生させる場合があります。



危険

交換しようとしている FRU がホット・スワップに対応していない場合、それを取り外す前に、コンピューターの電源をオフにし、すべての電源コードをコンセントから抜き、バッテリー・パックを取り外して、相互接続しているケーブルをすべて切り離してください。



위험

FRU를 교체하고 나서 컴퓨터 전원을 켜기 전에 모든 나사, 스프링 및 기타 작은 부품들이 올바른 위치에 있는지, 컴퓨터 내부에 단단하게 연결되어 있는지 확인하십시오. 컴퓨터를 흔들어 달깍거리는 소리가 나지 않는지 확인하십시오. 금속 부품 또는 금속 조각은 누전을 일으킬 수 있습니다.



위험

일부 보조 배터리에는 소량의 니켈 및 카트뮴이 포함되어 있습니다. 보조 배터리를 분해하거나, 다시 충전하거나, 불 또는 물에 던지거나, 단락시키지 마십시오. 배터리 팩을 폐기할 때에는 해당 지역의 법률 규정을 따르십시오. 배터리 팩을 교체할 때에는 올바른 배터리만 사용하십시오. 올바르지 않은 배터리를 사용하면 배터리가 발화되거나 폭발할 수 있습니다.



위험

배터리 팩에는 소량의 니켈이 포함되어 있습니다. 배터리 팩을 분해하거나, 불 또는 물에 던지거나, 단락시키지 마십시오. 배터리 팩을 폐기할 때에는 해당 지역의 법률 규정을 따르십시오. 배터리 팩을 교체할 때에는 올바른 배터리만 사용하십시오. 올바르지 않은 배터리를 사용하면 배터리가 발화되거나 폭발할 수 있습니다.



위험

리튬 배터리는 화재, 폭발 또는 심각한 화상을 일으킬 수 있습니다. 리튬 배터리를 다시 충전하거나, 극성 커넥터를 제거하거나, 분해하거나, 100C(212F) 이상으로 가열하거나, 소각하거나, 전지 내용물을 물에 노출시키지 마십시오. 배터리를 폐기할 때에는 해당 지역을 법률 규정을 따르십시오. 올바른 배터리만 사용하십시오. 올바르지 않은 배터리를 사용하면 배터리가 발화되거나 폭발할 수 있습니다.



위험

LCD가 파손되어 LCD 내부의 액체가 눈에 들어가거나 손에 묻으면 즉시 깨끗한 물로 15분 이상 닦아 내십시오. 씻은 후에 조금이라도 이상을 느끼면 즉시 병원에 가서 의사의 진찰을 받아야 합니다.



위험

전기적 위험을 방지하려면 인버터 카드의 아래 부분을 보호하는 플라스틱 덮개를 제거하지 마십시오.



위험

기본 배터리의 전압은 낮지만, 단락되거나 접지된 배터리는 화상을 입히기에 충분한 전류와 가연성 물질을 발생시킬 수 있습니다.



위험

FRU 교체 시 Hot Swap이 지원되지 않는 경우, FRU를 제거하기 전에 컴퓨터의 전원을 끄고, 전기 콘센트에서 전원 코드를 분리하고, 배터리를 제거한 후, 연결된 모든 케이블을 분리하십시오.



PELIGRO

Antes de encender el sistema despues de sustituir una FRU, compruebe que todos los tornillos, muelles y demás piezas pequeñas se encuentran en su sitio y no se encuentran sueltas dentro del sistema. Compruébelo agitando el sistema y escuchando los posibles ruidos que provocarían. Las piezas metálicas pueden causar cortocircuitos eléctricos.



PELIGRO

Algunas baterías de reserva contienen una pequeña cantidad de níquel y cadmio. No las desmonte, ni recargue, ni las eche al fuego o al agua ni las cortocircuite. Deséchelas tal como dispone la normativa local. Utilice sólo baterías que se encuentren en la lista de piezas. La utilización de una batería no apropiada puede provocar la ignición o explosión de la misma.



PELIGRO

Las baterías contienen pequeñas cantidades de níquel. No las desmonte, ni recargue, ni las eche al fuego o al agua ni las cortocircuite. Deséchelas tal como dispone la normativa local. Utilice sólo baterías que se encuentren en la lista de piezas al sustituir la batería. La utilización de una batería no apropiada puede provocar la ignición o explosión de la misma.



PELIGRO

La batería de repuesto es una batería de litio y puede provocar incendios, explosiones o quemaduras graves. No la recargue, ni quite el conector polarizado, ni la desmonte, ni caliente por encima de los 100°C (212°F), ni la incinere ni exponga el contenido de sus celdas al agua. Deséchela tal como dispone la normativa local.



PELIGRO

Si la LCD se rompe y el fluido de su interior entra en contacto con sus ojos o sus manos, lave inmediatamente las áreas afectadas con agua durante 15 minutos como mínimo. Obtenga atención medica si se presenta algún síntoma del fluido despues de lavarse.



PELIGRO

Para evitar descargas, no quite la cubierta de plástico que rodea la parte baja de la tarjeta invertida.



PELIGRO

Aunque las baterías principales tienen un voltaje bajo, una batería cortocircuitada o con contacto a tierra puede producir la corriente suficiente como para quemar material combustible o provocar quemaduras en el personal.



PELIGRO

Salvo que se permita el intercambio en caliente para la unidad sustituible localmente, realice lo siguiente antes de extraerla: apague el sistema, desconecte todos los cables de alimentación de las tomas de alimentación eléctrica, extraiga la batería y desconecte los cables de interconexión.



危險

完成 FRU 更換之後，在開啟電腦的電源之前，請確定所有螺絲、彈簧及其他小零件都已歸位，沒有遺留在電腦內部。
若要確認這一點，請搖晃電腦，聽聽看是否有卡嗒的聲響。
金屬零件或儀錶的火花會造成電線短路。



危險

部分備用電池含有微量的鋰和鎘。請勿拆開備用電池、再充電、丟入火或水中，或使其形成短路。請按照當地法令或規定來棄置電池。

僅限使用零件清單中的電池。使用不適當的電池會導致電池起火或爆炸。



危險

電池套件含有微量的鋰。請勿拆開電池套件、丟入火或水中，或使其形成短路。請按照當地法令或規定來棄置電池套件。

更換電池套件時，僅限使用零件清單中的電池。使用不適當的電池會導致電池起火或爆炸。



危險

鋰電池會導致起火、爆炸或嚴重燒傷。請勿再充電、拔除其電極接頭、拆開、加熱超過 100°C (212°F) 、焚燒，或讓電池組成物浸到水。請按照當地法令或規定來棄置電池。
僅限使用零件清單中的電池。使用不適當的電池會導致電池起火或爆炸。

危險

如果 LCD 破裂導致 LCD 流出的液體沾到您的眼睛或手，請立即以清水沖洗沾染部位至少 15 分鐘。如果在清洗後出現該液體所造成的任何症狀，請就醫治療。

危險

為避免電擊，請勿拆下轉換卡下面的塑膠護蓋。

危險

雖然主電池的電壓很低，但短路或接地電池所產生的電流，仍足以使人燒傷或使可燃物質起火。

危險

除非 FRU 允許以熱抽換來替換，否則請依下列方式將其移除：將電腦關機，拔除插座上所有電源線，移除電池包，並拔開任何交互連接的線材。

Chapter 2. Important service information

This chapter introduces following important service information that applies to all machine types supported by this manual:

- "Strategy for replacing FRUs" on page 21
  - "Strategy for replacing a solid-state drive" on page 21
  - "Important notice for replacing a system board" on page 22
  - "How to use error message" on page 22
- "Strategy for replacing FRUs for CTO, special-bid, and standard models" on page 22
  - "Product definition" on page 22
  - "FRU identification" on page 22

Important:

- Advise customers to contact the Lenovo Customer Support Center if they need any assistance in obtaining or installing any software fixes, drivers, and UEFI BIOS downloads. Telephone numbers for Lenovo Support are available at: https://pcsupport.lenovo.com/supportphonelist
- System Disassembly/Reassembly videos that show the FRU removals or replacements for the Lenovo authorized service technicians are available in the following support site: https://www.lenovoservicetraining.com/ion/

Strategy for replacing FRUs

Before replacing parts:

Ensure that all software fixes, drivers, and UEFI BIOS downloads are installed before replacing any FRUs listed in this manual.

After a system board is replaced, ensure that the latest UEFI BIOS is loaded to the system board before completing the service action.

To download software fixes, drivers, and UEFI BIOS, go to https://support.lenovo.com and follow the instructions on the screen.

Use the following strategy to prevent unnecessary expense for replacing and servicing FRUs:

- If you are instructed to replace a FRU but the replacement does not correct the problem, reinstall the original FRU before you continue.
- Some computers have both a processor board and a system board. If you are instructed to replace either the processor board or the system board, and replacing one of them does not correct the problem, reinstall that board, and then replace the other one.
- If an adapter or a device consists of more than one FRU, any of the FRUs may be the cause of the error. Before replacing the adapter or device, remove the FRUs, one by one, to see if the symptoms change. Replace only the FRU that changed the symptoms.

Strategy for replacing a solid-state drive

Always try to run a low-level format operation before replacing a solid-state drive. This will cause all customer data on the drive to be lost. Ensure that the customer has a current backup of the data before you perform this task.

© Copyright Lenovo 2020

Attention: The drive startup sequence in the computer you are servicing might have been changed. Be extremely careful during write operations such as copying, saving, or formatting. If you select an incorrect drive, data or programs can be overwritten.

Important notice for replacing a system board

Some components mounted on a system board are very sensitive. Improper handling of a system board can cause damage to those components, and may cause a system malfunction.

Attention: When handling a system board:

- Do not drop a system board or apply any excessive force to it.
- Avoid rough handling of any kind.
- Avoid bending a system board and hard pushing to prevent cracking at each BGA (Ball Grid Array) chipset.

How to use error message

Use the error codes displayed on the screen to diagnose failures. If more than one error code is displayed, begin the diagnosis with the first error code. Whatever causes the first error code might also cause false error codes. If no error code is displayed, see whether the error symptom is listed in the section of “Symptom-to-FRU index” on page 36.

Strategy for replacing FRUs for CTO, special-bid, and standard models

This topic provides information about the model types and FRU identification.

Product definition

This topic introduces different model types and how to identify each type.

Dynamic Configure To Order (CTO) model

This model provides the ability for a customer to configure a Lenovo solution from a Web Site, and have this configuration sent to fulfillment, where it is built and shipped directly to the customer. The machine label and eSupport will load these products as the 4-character MT, 4-character model, and 2-character country code. The model is “CTO1” and the default country code is “WW” (example: 20AACTO1WW).

Special-bid model

This model is a unique configuration that has been negotiated between Lenovo and the customer. A unique MTM consists of a 4-character MT, a 4-character model, and a numeric 2-character country code is provided to the customer to place orders (example: 20AA000955). The country code assigned is numeric and does not designate a specific country or region. The custom model fact sheet for the MTM indicates which country the special bid MTM is set up for. Special-bid offering is not generally announced.

Standard model

Standard models (fixed configuration) are announced and offered to all customers. The MTM portion of the machine label consists of a 4-character MT, a 4-character model, and an alphabetic 2-character country code. The country code assigned is alphabetic and represents a designated country or region (example: 20AA0009UK).

FRU identification

To identify FRUs for a product, do the following:

1. Go to https://support.lenovo.com/partslookup.

2. Type the Machine Type in the corresponding field to get a general FRU list. Or type the Serial Number for more detailed FRU information.

Chapter 3. General checkout

This chapter presents following information:

- "What to do first" on page 25
- "Checkout guide" on page 26
  - "Diagnosing problems" on page 26
  - "Quick test programs" on page 27
  - "UEFI diagnostic program" on page 27
  - "Bootable diagnostic programs" on page 27
- "Power system checkout" on page 28

Some descriptions in this chapter might not apply to your particular computer.

Before you go to the checkout guide, be sure to read the following important notes.

Important notes:

- **Only certified trained personnel should service the computer.**
- **Before replacing any FRU, read the entire page on removing and replacing FRUs.**
- **When you replace FRUs, it is recommended to use new nylon-coated screws.**
- **Be extremely careful during such write operations as copying, saving, or formatting.** Drives in the computer that you are servicing sequence might have been altered. If you select an incorrect drive, data or programs might be overwritten.
- **Replace a FRU only with another FRU of the correct model.** When you replace a FRU, ensure that the model of the machine and the FRU part number are correct.
- **A FRU should not be replaced because of a single, unreproducible failure.** Single failures can occur for a variety of reasons that have nothing to do with a hardware defect, such as cosmic radiation, ESD, or software errors. Consider replacing a FRU only when a problem recurs. If you suspect that a FRU is defective, clear the error log and run the test again. If the error does not recur, do not replace the FRU.
- **Be careful not to replace a nondefective FRU.**

What to do first

When you return a FRU, you must include the following information in the parts exchange form or parts return form that you attach to it:

1. Name and phone number of service technician
2. Date of service
3. Date on which the machine failed
4. Date of purchase
5. Failure symptoms, error codes appearing on the display, and beep symptoms
6. Procedure index and page number in which the failing FRU was detected
7. Failing FRU name and part number
8. Machine type, model number, and serial number
9. Customer's name and address

Note: During the warranty period, the customer may be responsible for repair costs if the computer damage was caused by misuse, accident, modification, unsuitable physical or operating environment, or improper maintenance by the customer. Following is a list of some common items that are not covered under warranty and some symptoms that might indicate that the system was subjected to stress beyond normal use.

Before checking problems with the computer, determine whether the damage is covered under the warranty by referring to the following list:

© Copyright Lenovo 2020

The following are not covered under warranty:
- LCD panel cracked from the application of excessive force or from being dropped
- Scratched (cosmetic) parts
- Distortion, deformation, or discoloration of the cosmetic parts
- Plastic parts, latches, pins, or connectors that have been cracked or broken by excessive force
- Damage caused by liquid spilled into the system
- Damage caused by the improper insertion of a PC Card or the installation of an incompatible card
- Diskette drive damage caused by pressure on the diskette drive cover, foreign material in the drive, or the insertion of a diskette with multiple labels
- Damaged or bent diskette eject button
- Fuses blown by attachment of a nonsupported device
- Forgotten computer password (making the computer unusable)
- Sticky keys caused by spilling a liquid onto the keyboard
- Use of an incorrect ac power adapter on laptop products

The following symptoms might indicate damage caused by nonwarranted activities:
- Missing parts might be a symptom of unauthorized service or modification.
- Check for obvious damage to a solid-state drive. If the spindle of a solid-state drive becomes noisy, the solid-state drive might have been dropped or subject to excessive force.

Checkout guide

Use the following procedures as a guide in identifying and correcting problems with the ThinkPad notebook computer.

Note: The diagnostic tests are intended to test only ThinkPad products. The use of non-ThinkPad products, prototype cards, or modified options can lead to false indications of errors and invalid system responses.

1. Identify the failing symptoms in as much detail as possible.
2. Verify the symptoms. Try to re-create the failure by running the diagnostic test or by repeating the operation.

Diagnosing problems

Many computer problems can be solved without outside assistance. If you experience a problem with your computer, the first place to start is the troubleshooting information in your computer documentation. If you suspect a software problem, see the documentation, including readme files and help information systems, that come with the operating system or program.

Lenovo Vantage is preinstalled on your computer. It supports the hardware scan function. It combines diagnostic tests, system information collection, security status, and support information, along with hints and tips for optimal system performance.

Note: If you are unable to isolate and repair the problem yourself after running the program, save and print the log files created by the program. You need the log files when you speak to a Lenovo technical support representative.

The troubleshooting information or the diagnostic programs might tell you that you need additional or updated device drivers or other software. You can get the latest technical information and download device drivers and updates from the Lenovo Support Web site at:

https://support.lenovo.com

For additional information, see the help system of the program.

Quick test programs

Run quick test programs to troubleshoot and resolve computer problems, especially when the computer does not have Lenovo Vantage installed.

To download and install a quick test program, go to https://www.lenovo.com/diags, and follow the instructions on the Web site.

To run a test using quick test program, do the following:

1. Go to the C:\SWTOOLS\ldiag directory.
2. Double-click the lsc_lite.exe file.
3. When the **User Account Control** window opens, click **Yes**.
4. Select the device class to be tested.
5. Select the devices to be tested.
6. Select the test to be performed.
7. Follow the instructions on the screen to start the test. When a problem is detected, information messages are displayed. Refer to the messages to troubleshoot the problem.

UEFI diagnostic program

A UEFI diagnostic program is preinstalled on the computer. This program enables you to view system information and test some hardware devices in your computer, such as memory, storage devices, the LCD, and system board buses.

To run the UEFI diagnostic program, do the following:

1. Turn on the computer. If the computer cannot be turned on, go to “Power system checkout” on page 28, and check the power sources. If an error code is displayed, go to “Symptom-to-FRU index” on page 36 for error code descriptions and troubleshooting hints.
2. When the logo screen is displayed, repeatedly press and release the F10 key. The main screen of the UEFI diagnostic program is displayed.
3. Follow the instructions on the screen to use the program.

The following table displays the main items of the UEFI diagnostic program. Depending on the model, the items might differ slightly.

Table 1. Items on the main screen of the UEFI diagnostic program

Tests	Tools
• Memory quick test • Memory extended test • Memory bit fade test (180 min) • Quick storage device test • LCD test • PCI-e test • Motherboard buses test • Exit application	• System information • Generate configuration file • Execute from configuration file • Recover bad sectors tool

Bootable diagnostic programs

If the computer you are servicing is not installed with the UEFI diagnostic program, you can download a bootable diagnostic program from the Lenovo Support Web site. The bootable diagnostic program enables you to view system information and test some hardware devices in your computer, such as memory, storage

devices, the LCD, and system board buses. To use the bootable diagnostic program, you can create a bootable diagnostic medium using a USB device or disc.

To create a bootable diagnostic medium, do the following:

1. Go to https://www.lenovo.com/diags.
2. Click **Lenovo Bootable Diagnostics**.
3. Follow the instructions on the Web site to create a bootable diagnostic medium on a USB device or disc.

To use the diagnostic medium you have created, do one of the following:

- If you have created the bootable diagnostic medium on a USB device, do the following:
  1. Attach the USB device to the computer.
  2. Turn on the computer. If the computer cannot be turned on, go to “Power system checkout” on page 28, and check the power sources. If an error code is displayed, go to “Symptom-to-FRU index” on page 36 for error code descriptions and troubleshooting hints.
  3. When the logo screen is displayed, repeatedly press and release the F12 key. When the Boot Menu window opens, release the F12 key.
  4. Use the arrow keys to select **USB HDD** and then press Enter. The diagnostic program launches.
  5. Follow the instructions on the screen to use the diagnostic program.
- If you have created the bootable diagnostic medium using a disc, do the following:
  1. Turn on the computer. If the computer cannot be turned on, go to “Power system checkout” on page 28, and check the power sources. If an error code is displayed, go to “Symptom-to-FRU index” on page 36 for error code descriptions and troubleshooting hints.
  2. Insert the disc into the optical drive.
  3. Restart the computer.
  4. When the logo screen is displayed, repeatedly press and release the F12 key. When the Boot Menu window opens, release the F12 key.
  5. Use the arrow keys to select **ATAPI CDx** (x: 0, 1, ...) and then press Enter. The diagnostic program launches.
  6. Follow the instructions on the screen to use the diagnostic program.

Power system checkout

To verify if a battery or an ac power adapter is functional, do the following:

1. Turn off the computer.
2. Connect the ac power adapter.
3. Turn on the computer. If the computer can be turned on, it means that either the battery or the ac power adapter is functional.
4. Insert a straightened paper clip into the emergency-reset hole to reset the computer. If the computer is still powered on, it means that the ac power adapter is functional.
5. Turn off the computer.
6. Disconnect the ac power adapter and turn on the computer. If the computer can be turned on, it means that the battery is functional.

If you suspect a power problem, see one of the following power supply checkouts:

- “Checking the ac power adapter” on page 29
- “Checking the built-in battery and operational charging” on page 29
- “Checking the coin-cell battery” on page 29

Checking the ac power adapter

You are here because the computer fails only when the ac power adapter is used.

- If the power problem occurs only when the docking station or the port replicator is used, replace the docking station or the port replicator.
- If the system status indicator does not blink three times when an ac power source is connected, check the power cord of the ac power adapter for correct continuity and installation.
- If the computer does not charge during operation, go to “Checking the built-in battery and operational charging” on page 29.

Note: Noise from the ac power adapter does not always indicate a defect.

Checking the USB-C type ac power adapter

To check the USB-C type ac power adapter, do the following:

1. Connect the computer to a power outlet and turn on the computer.
2. Start Lenovo Vantage program, and then click **Hardware Settings → Power**. The ac power adapter information is displayed.

Ensure that you use the USB-C type ac power adapter that is shipped with the computer to provide enough power to the computer. Otherwise, a message will be displayed, prompting you that the computer will not be charged or will be charged slowly.

Checking the built-in battery and operational charging

This computer supports only batteries specially designed for this specific system and manufactured by Lenovo or an authorized builder. The system does not support unauthorized batteries or batteries designed for other systems. If an unauthorized battery or a battery designed for another systems is installed, the system will not charge.

Attention: Lenovo has no responsibility for the performance or safety of unauthorized batteries, and provides no warranties for failures or damage arising out of their use.

Move your pointer to the battery-status icon in the Windows notification area to check the battery status. The battery-status icon displays the percentage of battery power remaining and how long you can use your computer before you must charge the battery.

To check whether the battery charges properly during operation, do the following:

1. Discharge the battery until the remained battery power is less than 50%.
2. Connect the computer to ac power to charge the battery. If the battery status icon in the Windows notification area indicates that the battery is not charging, remove the battery and let it return to room temperature.
3. Reinstall the battery. If the battery is still not charging, replace the battery.
4. Check the battery status icon again. If the same error still exists, replace the system board.

Checking the coin-cell battery

Do the following:

1. Power off the computer, and unplug the ac power adapter from it.
2. Turn the computer upside down.
3. Remove the built-in battery (see “Disabling the built-in battery” on page 69).
4. Remove the coin-cell battery (see “1090 Coin-cell battery” on page 81).
5. Measure the voltage of the battery. See the following figure.

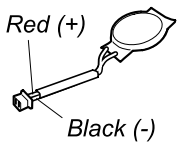

Wire	Voltage (V dc)
Red	+2.5 to +3.2
Black	Ground

- If the voltage is correct, replace the system board.
- If the voltage is not correct, replace the coin-cell battery.
- If the coin-cell battery discharges quickly after replacement, replace the system board.

Chapter 4. Related service information

This chapter presents following information:

- “Recovery information for the Windows 10 operating system” on page 31
- “Passwords” on page 33
- “Power management” on page 35
- “Symptom-to-FRU index” on page 36

Service Web site:
When the latest maintenance diskette and the system program service diskette become available, they will be posted on:
https://support.lenovo.com

Recovery information for the Windows 10 operating system

The Windows recovery programs enable you to reset your computer or use advanced startup options.

It is recommended that you create a recovery USB drive as early as possible. Store the recovery USB drive as a backup or replacement for the Windows recovery programs.

For more information, see “Creating and using a recovery USB drive” on page 32.

Resetting your computer

If your computer does not perform well, you might consider resetting your computer. In the resetting process, you can choose to keep your files or remove them, and then reinstall the Windows operating system.

To reset your computer, do the following:

Note: The graphical user interface (GUI) items of the operating system might change without notice.

1. Open the Start menu, and then click **Settings → Update & Security → Recovery**.
2. In the **Reset this PC** section, click **Get started**.
3. Follow the instructions on the screen to reset your computer.

Using advanced startup options

With advanced startup options, you can change the firmware settings of the computer, change the startup settings of the Windows operating system, start the computer from an external device, or restore the Windows operating system from a system image.

To use advanced startup options, do the following:

Note: The GUI items of the operating system might change without notice.

1. Open the Start menu, and then click **Settings → Update & security → Recovery**.
2. In the **Advanced startup** section, click **Restart now → Troubleshoot → Advanced options**.
3. Select a startup option you want, and then follow the instructions on the screen.

© Copyright Lenovo 2020

Recovering your operating system if Windows 10 fails to start

The Windows recovery environment on your computer is capable of operating independently from the Windows 10 operating system. This enables you to recover or repair the operating system even if the Windows 10 operating system fails to start.

After two consecutive failed boot attempts, the Windows recovery environment starts automatically. Then you can choose repair and recovery options by following the instructions on the screen.

Note: Ensure that your computer is connected to ac power during the recovery process.

Creating and using a recovery USB drive

You can create a recovery USB drive as a backup for the Windows recovery programs. With the recovery USB drive, you can troubleshoot and fix the problems even if the preinstalled Windows recovery programs are damaged.

Creating a recovery USB drive

The USB drive that you use to create the recovery USB drive must be at least 16 GB of storage. The actual USB capacity that is required depends on the size of the recovery image.

Attention: The creation process deletes anything stored on the USB drive. To avoid data loss, make a backup copy of all the data that you want to keep.

To create a recovery USB drive, do the following:

Note: Ensure that your computer is connected to ac power during the following process.

1. Connect a proper USB drive (at least 16 GB of storage).
2. Type `recovery` in the search box on the taskbar. Then click **Create a recovery drive**.
3. Click **Yes** in the User Account Control window to allow the Recovery Media Creator program to start.
4. In the Recovery Drive window, follow the on-screen instructions to create a recovery USB drive.

Using the recovery USB drive

If you cannot start your computer, use the recovery USB drive to recover your computer.

To use a recovery USB drive, do the following:

Note: Ensure that your computer is connected to ac power.

1. Connect the recovery USB drive to the computer.
2. Turn on or restart the computer. Before the Windows operating system starts, repeatedly press the F12 key. The Boot Menu window opens.
3. Select the recovery USB drive as the boot device.
4. Select a preferred keyboard layout.
5. Click **Troubleshoot** to display the optional recovery solutions.
6. Select a corresponding recovery solution according to your situation. Then follow the instructions on the screen to complete the process.

Passwords

As many as three passwords might be needed for a ThinkPad notebook computer: the power-on password, the hard disk password, and the supervisor password.

If any of these passwords has been set, a prompt for it will be displayed on the screen whenever the computer is turned on. The computer does not start until the password is entered.

Note: If only a supervisor password is set, the password prompt will not be displayed when the operating system is started.

Power-on password

A power-on password protects the system from being turned on by an unauthorized person. The password must be entered before the operating system can be started. For instructions on how to remove the power-on password, see “How to remove the power-on password” on page 34.

Hard disk password

There are two hard disk passwords:

- User hard disk password - for the user
- Master hard disk password - for the system administrator, who can use it to get access to the hard disk even if the user has changed the user hard disk password.

Note: There are two modes for the hard disk password: **User only** and **Master + User**. The **Master + User** mode requires two hard disk passwords; the system administrator enters both in the same operation. The system administrator then provides the user hard disk password to the system user.

Attention: If the user hard disk password has been forgotten, check whether a master hard disk password has been set. If a master hard disk password has been set, it can be used to access the solid-state drive. If no master hard disk password is available, neither Lenovo nor Lenovo authorized service technicians provide any services to reset either the user hard disk password or the master hard disk password, or to recover data from the solid-state drive. The solid-state drive can be replaced for a scheduled fee.

For instructions on how to remove the hard disk password, see “How to remove the hard disk password” on page 34.

Supervisor password

The supervisor password protects the system information stored in UEFI BIOS. It provides the following security features:

- If only a supervisor password is set, a password prompt is displayed when you try to enter the UEFI BIOS menu. Unauthorized users cannot change most of the system configuration options in the UEFI BIOS menu without the password.
- The system administrator can use the supervisor password to access a computer even if the user of that computer has set a power-on password. The supervisor password overrides the power-on password.
- The system administrator can set the same supervisor password on many ThinkPad notebook computers to make administration easier.

Attention: If the supervisor password has been forgotten and cannot be made available to the service technician, there is no service procedure to reset the password. The system board must be replaced for a scheduled fee.

How to remove the power-on password

To remove the power-on password, do one of the following:

If no supervisor password has been set, do the following to remove the power-on password:

1. Turn off the computer.
2. Remove the battery. For instructions on how to remove the battery, see “1080 Built-in battery” on page 79.
3. Remove the coin-cell battery. For instructions on how to remove the coin-cell battery, see “1090 Coin-cell battery” on page 81.
4. Turn on the computer and wait until the POST ends. After the POST ends, the password prompt will not be displayed. The power-on password has been removed.
5. Reinstall the coin-cell battery and the battery.

If a supervisor password has been set and is known to the service technician, do the following to remove the power-on password:

1. Turn on the computer.
2. When the ThinkPad logo is displayed, immediately press F1.
3. Type the supervisor password to enter the UEFI BIOS menu.
4. Select **Security**.
5. Select **Password**.
6. Select **Power-On Password**.
7. Type the current supervisor password in the **Enter Current Password** field. Then, leave the **Enter New Password** field blank, and press Enter twice.
8. In the Changes have been saved window, press Enter.
9. Press F10 to save changes and exit.

How to remove the hard disk password

Attention: If **User only** mode is selected and the user hard disk password has been forgotten and cannot be made available to the service technician, neither Lenovo nor Lenovo authorized service technicians provide any services to reset the user hard disk password, or to recover data from the solid-state drive. The solid-state drive can be replaced for a scheduled fee. To put the system back to operational status, the only Lenovo and Lenovo-authorized service solution would be to replace the solid-state drive with a scheduled fee.

To remove a user hard disk password that has been forgotten, when the supervisor password and the master hard disk password are known, do the following:

1. Turn on the computer.
2. When the logo screen is displayed, immediately press F1 to enter the UEFI BIOS menu.
3. Select **Security**.
4. Select **Password**.
5. Select **Hard-disk *x* password** where *x* is the letter of the hard disk drive. A pop-up window opens.
6. Select **Master HDP**, where HDP stands for hard disk password.
7. Type the current master hard disk password in the **Enter Current Password** field. Then, leave the **Enter New Password** field blank, and press Enter twice.
8. Press F10 to save changes and exit. The user hard disk password and the master hard disk password have been removed.

Power management

To reduce power consumption, the computer has two power management modes: sleep and hibernation.

Sleep mode

When the computer enters sleep mode, the following events occur:
- The LCD is powered off.
- The solid-state drive is powered off.
- The microprocessor stops.

To put your computer into sleep mode, open the Start menu, click **Power**, and then click **Sleep**.

In certain circumstances, the computer goes into sleep mode automatically:

- After a period of inactivity specified in power plan settings
- When the battery power is low

To cause the computer to return from sleep mode and resume operation, do one of the following:
- Press any key.
- Open the LCD cover.
- Turn on the power button.

Also, in either of the following events, the computer automatically returns from sleep mode and resumes operation:

- The ring indicator (RI) is signaled by a serial device or a PC Card device.
- The time set on the resume timer elapses.

  Note: The computer does not accept any input immediately after it enters sleep mode. Wait a few seconds before taking any action to reenter operation mode.

Hibernation mode

In hibernation mode, the following occurs:

- The system status, RAM, VRAM, and setup data are stored on the solid-state drive.
- The system is powered off.

Note: If the computer enters the hibernation mode while it is connected to the dock, do not disconnect it before resuming normal operation. If you do disconnect it and then try to resume normal operation, you will get an error message, and you will have to restart the system.

If you have defined one of the following actions as the event that causes the system to go into hibernation mode, perform that action.
- Closing the lid.
- Pressing the power button.

Also, the computer goes into hibernation mode automatically after a period of inactivity specified in power plan settings.

When the power is turned on, the computer returns from hibernation mode and resumes operation. The hibernation file in the boot record on the solid-state drive is read, and system status is restored from the solid-state drive.

Symptom-to-FRU index

This section contains following information:

- “Numeric error codes” on page 36
- “Error messages” on page 37
- “Beep errors” on page 38
- “No-beep symptoms” on page 39
- “LCD-related symptoms” on page 40
- “Intermittent problems” on page 41
- “Undetermined problems” on page 41

The symptom-to-FRU index in this section lists symptoms and errors and their possible causes. The most likely cause is listed first, in boldface type.

Note: Do the FRU replacement or other actions in the sequence shown in the column headed “FRU or action, in sequence.” If replacing a FRU does not solve the problem, put the original part back in the computer. Do not replace a nondefective FRU.

This index can also help you determine, during regular servicing, what FRUs are likely to need to be replaced next.

A numeric error is displayed for each error detected in POST or system operation. In the displays, **n** can be any number.

If no numeric code is displayed, check the narrative descriptions of symptoms. If the symptom is not described there, go to “Intermittent problems” on page 41.

Note: For a device not supported by diagnostic codes in the ThinkPad notebook computers, see the manual for that device.

Numeric error codes

Table 2. Numeric error codes

Symptom or error	FRU or action, in sequence
0177 Bad SVP data, stop POST task—The checksum of the supervisor password in the EEPROM is not correct.	**Replace the system board.**
0183 Bad CRC of Security Settings in EFI Variable. Enter the ThinkPad Setup program. – The checksum of the Security settings in the EFI Variable is not correct.	1. **Run the ThinkPad Setup program. The settings will be corrected automatically. Then save the current settings by pressing F10.** 2. Replace the system board.
0187 EEAIA data access error - The access to EEPROM is failed.	**Replace the system board.**
0188 Invalid RFID Serialization Information Area.	**Replace the system board.**
0189 Invalid RFID configuration information area - The EEPROM checksum is not correct.	**Replace the system board.**
0190 Critical low-battery error	1. **Charge the battery.** 2. Replace the battery.

Table 2. Numeric error codes (continued)

Symptom or error	FRU or action, in sequence
0191 System Security - Invalid Remote Change requested.	1. **Run the ThinkPad Setup program, and then save current setting by pressing F10.** 2. Replace the system board.
0199 System Security - Security password retry count exceeded.	1. **Run the ThinkPad Setup program. The retry count will be reset. Then save the current settings by pressing F10.** 2. Replace the system board.
0270 Real Time Clock Error - System Real Time Clock is not functional.	**Have the computer serviced.**
0271 Real-Time Clock Error. Check Date and Time settings.	1. **Run ThinkPad Setup to reset the time and date.** 2. Replace the coin-cell battery and run the ThinkPad Setup program to reset the time and date.
1802 Unauthorized network card is plugged in - Turn off and remove the network card.	1. **Remove the network card.** 2. Replace the system board.
1820 More than one external fingerprint reader is attached. Power off and remove all but the reader that you set up within your main operating system.	**Remove all but the reader that you set up for the authentication.**
2100 Detection error on Main HDD (SSD0) or Detection error on Main HDD (HDD0)	1. **Reseat the M.2 solid-state drive.** 2. Replace the M.2 solid-state drive. 3. Replace the system board.
2110 Read error on Main HDD (SSD0) or Read error on Main HDD (HDD0)	1. **Reseat the M.2 solid-state drive.** 2. Replace the M.2 solid-state drive. 3. Replace the system board.
2200 Machine Type and Serial Number are invalid.	**Have the computer serviced.**
2201 Machine UUID is invalid	**Replace the system board.**
2202 Brand Name is invalid.	**Have the computer serviced.**
2203 System configuration is invalid.	**Have the computer serviced.**
2204 System configuration data is invalid.	**Have the computer serviced.**

Error messages

Table 3. Error messages

Symptom or error	FRU or action, in sequence
Fan error. (two short beeps)	1. **Replace the fan.** 2. Apply thermal grease. 3. Replace the system board.
Thermal sensing error.	**Replace the system board.**

Table 3. Error messages (continued)

Symptom or error	FRU or action, in sequence
The battery installed is not supported by this system and will not charge. Please replace the battery with the correct Lenovo battery for this system. Press the ESC key to continue.	**Replace the battery.**
This system does not support batteries that are not genuine Lenovo-made or authorized. The system will continue to boot, but may not charge unauthorized batteries. Press the ESC key to continue. **Attention:** Lenovo has no responsibility for the performance or safety of unauthorized batteries, and provides no warranties for failures or damage arising out of their use.	**Replace the battery.**

Beep errors

Lenovo SmartBeep technology enables you to decode beep errors with your smartphone when a black screen occurs with beeps from your computer. To decode the beep error with Lenovo SmartBeep technology, do the following:

1. Go to https://support.lenovo.com/smartbeep or scan the following QR Code.



2. Download the proper diagnostic app and install it on your smartphone.
3. Run the diagnostic app and place the smartphone near the computer.
4. Press the Fn key on your computer to emit the beep again. The diagnostic app decodes the beep error and shows possible solutions on the smartphone.

The following section describes some beep errors and the corresponding solutions.

Note: Do not attempt to service a product yourself unless instructed to do so by the Customer Support Center or product documentation. Only use a Lenovo-authorized service provider to repair your product.

Error codes	Solutions
0001: Reset error (platform reset not de-asserted)	1. Remove the ac power adapter and the removable battery if your computer has one. Then, reset the computer by doing one of the following: • For models with the emergency-reset hole, insert a straightened paper clip into the emergency-reset hole. Wait for one minute. Then, reconnect all power resources and restart the computer. • For models without the emergency-reset hole, press and hold the power button for about seven seconds. Then, reconnect to all power resources and restart the computer. 2. Replace the system board (service provider only).
0002: Internal bus error	Replace the system board (service provider only).
0281: General embedded controller error	Replace the system board (service provider only).
0282: Memory module error	1. Reinstall or replace the memory module. 2. Replace the system board (service provider only).
0283: PCI resource error	1. Remove PCIe devices (the M.2 card, PCIe card, and so on) (service provider only). 2. Replace the system board (service provider only).
0284: TCG-compliant functionality-related error (might be the BIOS code validation failure)	Replace the system board (service provider only).
0285: TCG-compliant functionality-related error (might be the TPM initialization failure)	Replace the system board (service provider only).
0286: Integrated graphics error	Replace the system board (service provider only).
0287: Discrete graphics error	1. Reinstall or replace the discrete graphics card (service provider only). 2. Replace the system board (service provider only).
0288: Computer display error	1. Reconnect the display cable on both the system board side and the computer display side (service provider only). 2. Replace the system board (service provider only).

No-beep symptoms

Table 4. No-beep symptoms

Symptom or error	FRU or action, in sequence
No beep, power-on indicator on, LCD blank, and no POST.	1. **Run LCD Self Test.** 2. Ensure that every connector is connected tightly and correctly. 3. Reseat memory module. 4. Replace the system board.
No beep, power-on indicator on, and LCD blank during POST.	1. **Run LCD Self Test.** 2. Reseat memory module. 3. Replace the system board.

Table 4. No-beep symptoms (continued)

Symptom or error	FRU or action, in sequence
The power-on password prompt appears.	A power-on password or a supervisor password is set. Type the password and press Enter.
The hard-disk password prompt appears.	A hard-disk password is set. Type the password and press Enter.

LCD-related symptoms

Important: The TFT LCD for the notebook computer contains many thin-film transistors (TFTs). The presence of a small number of dots that are missing, discolored, or always lighted is characteristic of TFT LCD technology, but excessive pixel problems can cause viewing concerns.

If the LCD you are servicing has two or less visible defective pixels, it should not be considered faulty. However, if the LCD has three or more visible defective pixels, it will be deemed as defective by Lenovo and it should be replaced.

Notes:
- This policy applies to all ThinkPad Notebooks purchased on 1 January, 2008 or later.
- Lenovo will not provide warranty replacement if the LCD is within specifications because we cannot guarantee that any replacement LCD will have zero pixel defects.
- One pixel consists of R, G, B sub-pixels.

LCD Self Test

When you turn on the computer and the LCD goes black, run LCD Self Test to help you determine whether the LCD functions normally.

To run LCD Self Test:

1. Ensure that the computer is connected to ac power. Then, press the power button for about seven seconds to turn off the computer.
2. Press Fn, left Ctrl, and the power button at the same time. If the computer displays five solid colors in sequence across the entire screen, it indicates that the LCD functions normally.
3. The test lasts for about 20 seconds and then exits automatically. You also can press the power button to exit the test.

Table 5. LCD-related symptoms

Symptom or error	FRU or action, in sequence
No beep, power-on indicator on, and a blank LCD during POST.	1. **Run LCD Self Test**. 2. Replace the system board.
• LCD backlight not working. • LCD too dark. • LCD brightness cannot be adjusted. • LCD contrast cannot be adjusted.	1. **Reseat the LCD connectors**. 2. Replace the LCD assembly. 3. Replace the system board.
• LCD screen unreadable. • Characters missing pixels. • Screen abnormal. • Wrong color displayed.	1. **See important note for "LCD-related symptoms"**. 2. Reseat all LCD connectors. 3. Replace the LCD assembly. 4. Replace the system board.
Horizontal or vertical lines displayed on LCD.	**Replace the LCD assembly**.

Intermittent problems

Intermittent system hang problems can be due to a variety of causes that have nothing to do with a hardware defect, such as cosmic radiation, ESD, or software errors. FRU replacement should be considered only when a problem recurs.

When analyzing an intermittent problem, do the following:

1. Run the diagnostic test for the system board in loop mode **at least 10 times**.
2. If no error is detected, do not replace any FRUs.
3. If any error is detected, replace the FRU shown by the FRU code. Rerun the test to verify that no more errors exist.

Undetermined problems

If the diagnostic tests did not identify the device that has failed, if wrong devices are installed, or if the system simply is not operating, follow these procedures to isolate the failing FRU (do not isolate FRUs that have no defects).

Verify that all attached devices are supported by the computer.

Verify that the power supply being used at the time of the failure is operating correctly. See “Power system checkout” on page 28.

1. Turn off the computer.
2. Visually check each FRU for damage. Replace any damaged FRU.
3. Remove or disconnect all of the following devices:
   a. Non-ThinkPad devices
   b. Devices attached to the dock
   c. Printer, mouse, and other external devices
   d. Battery
   e. Solid-state drive
   f. External diskette drive or optical drive
   g. Memory module
   h. PC cards
4. Turn on the computer.
5. Determine whether the problem has been solved.
6. If the problem does not recur, reconnect the removed devices one at a time until you find the failing FRU.
7. If the problem remains, replace the following FRUs one at a time (do not replace a nondefective FRU):
   a. System board
   b. LCD assembly

Chapter 5. Special keys

ThinkPad T490s

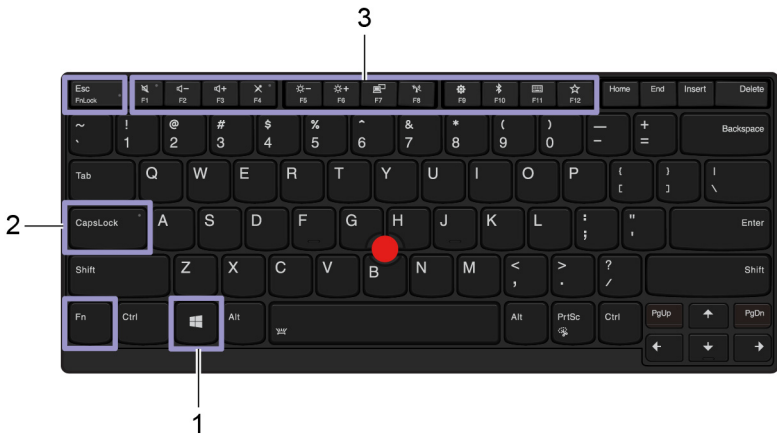

ThinkPad X390

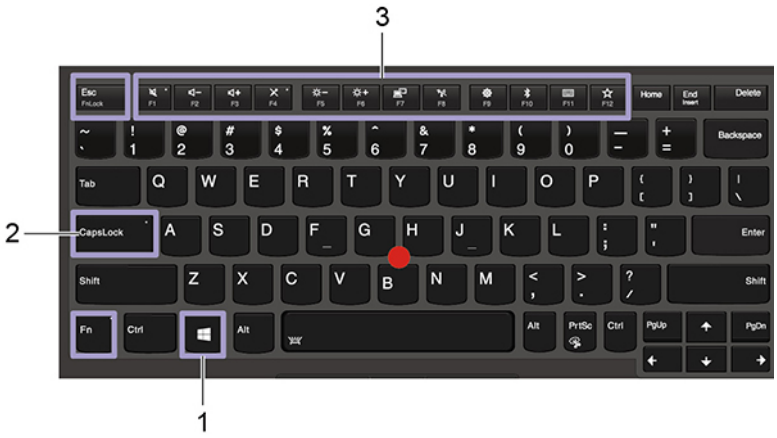

1. Windows logo key	Open the Start menu. For information about using this key with other keys, see the Windows help information.
2. Caps Lock key	Switch the letter case between the upper case and lower case. When the key indicator is on, you can type uppercase letters.
3. F1–F12 function keys	Invoke the special function printed as an icon on each key or standard function. To choose whether to invoke the special function or standard function: 1. Go to Control Panel and view by Large icons or Small icons. 2. Click **Keyboard** or **Lenovo - Keyboard Manager** and select the option of your preference.

© Copyright Lenovo 2020

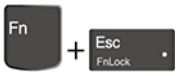	Switch the function of the F1–F12 keys between the standard function and special function printed as an icon on each key. When the Fn Lock indicator is on: • Press F1-F12 to use the standard function. • Press Fn+F1-F12 to use the special function. When the Fn Lock indicator is off: • Press Fn+F1-F12 to use the standard function. • Press F1-F12 to use the special function.
	Mute or unmute the speakers. When the key indicator is on, the speakers are muted. If you mute the speakers and turn off your computer, the speakers remain muted when you turn on your computer.
	Decrease the speaker volume.
	Increase the speaker volume.
	Mute or unmute the microphones. When the key indicator is on, the microphones are muted.
	Darken the computer display.
	Brighten the computer display.
	Manage external displays.
	Enable or disable the built-in wireless features.
	Open the Settings window.
	Enable or disable the built-in Bluetooth features.
	Open a keyboard setting page.
	Invoke the function defined by yourself: 1. Open the Start menu and click **Lenovo Vantage**. 2. Click **Hardware Settings** and then click **Input**. 3. Locate the **Keyboard: User-defined Key** section and follow the on-screen instructions to complete the setting. On this setting page, you can also define different functions for the key combinations with F12, such as Shift+F12, Alt+F12, or Ctrl+F12.
	Open the Snipping Tool program.
Fn+Spacebar	Switch between different keyboard backlight statuses if your computer supports keyboard backlight.
Fn+B	Equal the Break key on a conventional external keyboard.

Fn+K	Equal the ScrLK or Scroll Lock key on a conventional external keyboard.
Fn+P	Equal the Pause key on a conventional external keyboard.
Fn+S	Equal the SysRq key on a conventional external keyboard.
Fn+4	Put the computer to sleep mode. To wake up the computer, press Fn or the power button.
Fn+Left arrow key	Equal the Home key.
Fn+Right arrow key	Equal the End key.

Chapter 6. Locations

Locating computer controls, connectors, and indicators

Front

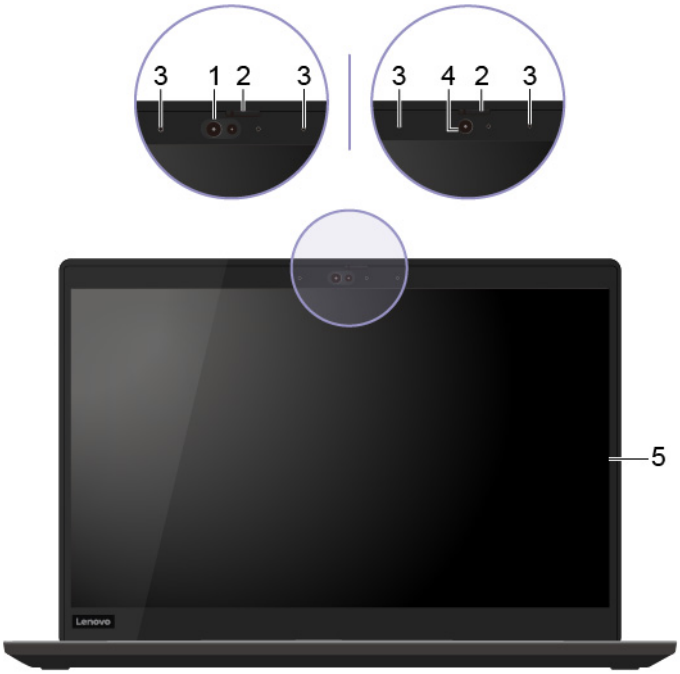

1. Infrared camera*	4. Camera*
2. ThinkShutter*	5. Multi-touch screen*
3. Microphones*	

* for selected models

© Copyright Lenovo 2020

Base

ThinkPad T490s



ThinkPad X390



1. Power button	4. NFC mark*
2. Fingerprint reader*	5. TrackPoint® pointing device
3. Trackpad	

* for selected models

Left

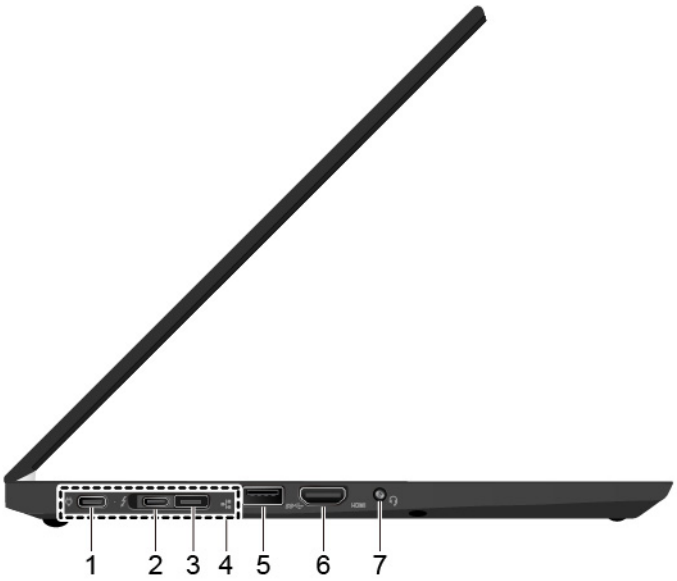

1. USB-C™ connector (USB 3.1 Gen 1)	5. USB 3.1 connector Gen 1
2. Thunderbolt™ 3 connector (USB-C)	6. HDMI™ connector
3. Ethernet extension connector Gen 2	7. Audio connector
4. Docking-station connector	

Right



1. Smart-card slot*	3. Security-lock slot
2. Always On USB 3.1 connector Gen 1	

* for selected models

Rear

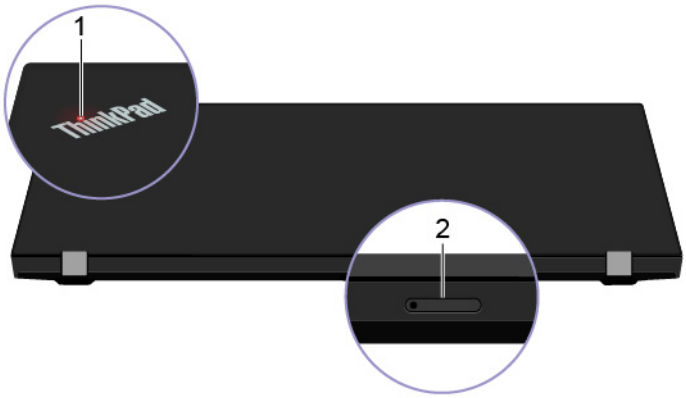

1. System status indicator	2. Nano-SIM-card and microSD-card slot

Bottom

ThinkPad T490s

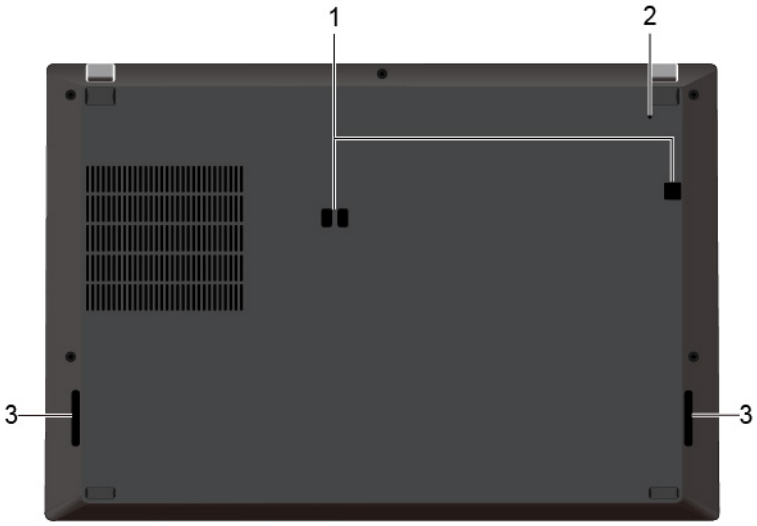

ThinkPad X390

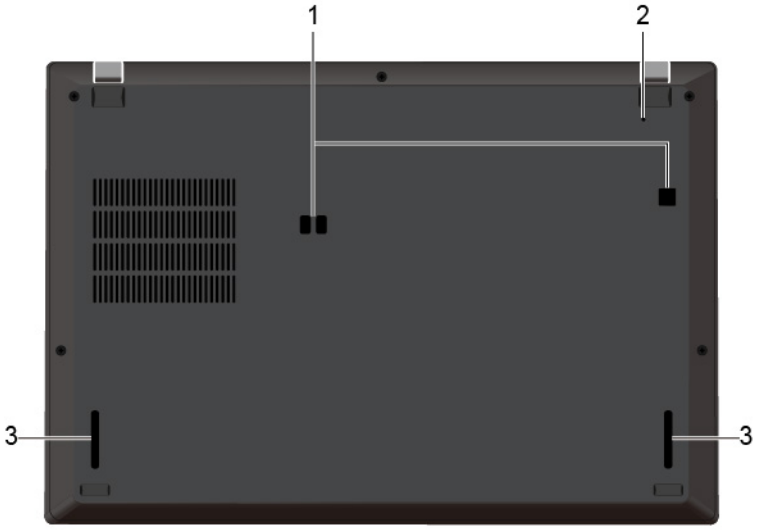

1. Docking-station hook holes	3. Speakers
2. Emergency-reset hole	

Locating FRUs and CRUs

This topic introduces the following service parts:

- “Major FRUs and CRUs” on page 52
- “LCD FRUs and CRUs” on page 58
- “Miscellaneous parts” on page 60
- “Connector and cable guide” on page 60

Notes:

- Each FRU is available for all types or models, unless otherwise specified.
- **CRU statement for customers:**
  You can resolve some problems with your product with a replacement part you can install yourself, called a "Customer Replaceable Unit" or "CRU." Some CRUs are designated as self-service CRUs and others are designated as optional-service CRUs. *Installation of self-service CRUs is your responsibility. For optional-service CRUs, you can either install the CRU yourself or you can request that a Service Provider install the CRU according to the warranty service for your product.* If you intend on installing the CRU, Lenovo will ship the CRU to you. CRU information and replacement instructions are shipped with your product and are available from Lenovo at any time upon request. You can find a list of CRUs for your product in this *Hardware Maintenance Manual*. An electronic version of this manual can be found at https://support.lenovo.com. Click **Documentation** and then follow the on-screen instructions to find the manual for your product. You might be required to return the defective CRU. When return is required: (1) return instructions, a prepaid shipping label, and a container will be included with the replacement CRU; and (2) you might be charged for the replacement CRU if Lenovo does not receive the defective CRU within thirty (30) days of your receipt of the replacement CRU. See your Lenovo Limited Warranty documentation for full details.
- ThinkPad computers contain the following types of CRUs and FRUs:
  - **Self-service CRUs:** Refer to parts that can be installed or replaced easily by customer themselves or by trained service technicians at an additional cost.
  - **Optional-service CRUs:** Refer to parts that can be installed or replaced by customers with a greater skill level. Trained service technicians can also provide service to install or replace the parts under the type of warranty designated for the customer's machine.
  - **FRUs:** Refer to parts that must be installed or replaced only by trained service technicians. If customers choose to replace the FRUs by themselves, the product warranty might be affected.

Major FRUs and CRUs

Notes:

- Depending on the computer model, your computer might look different from the illustration above.
- The Lenovo factory recovery USB key a is used to restore the Microsoft Windows operating system. It might not come with the computer, and a user might order it from https://pcsupport.lenovo.com/lenovorecovery, though additional shipping and handling fees might apply.

ThinkPad T490s

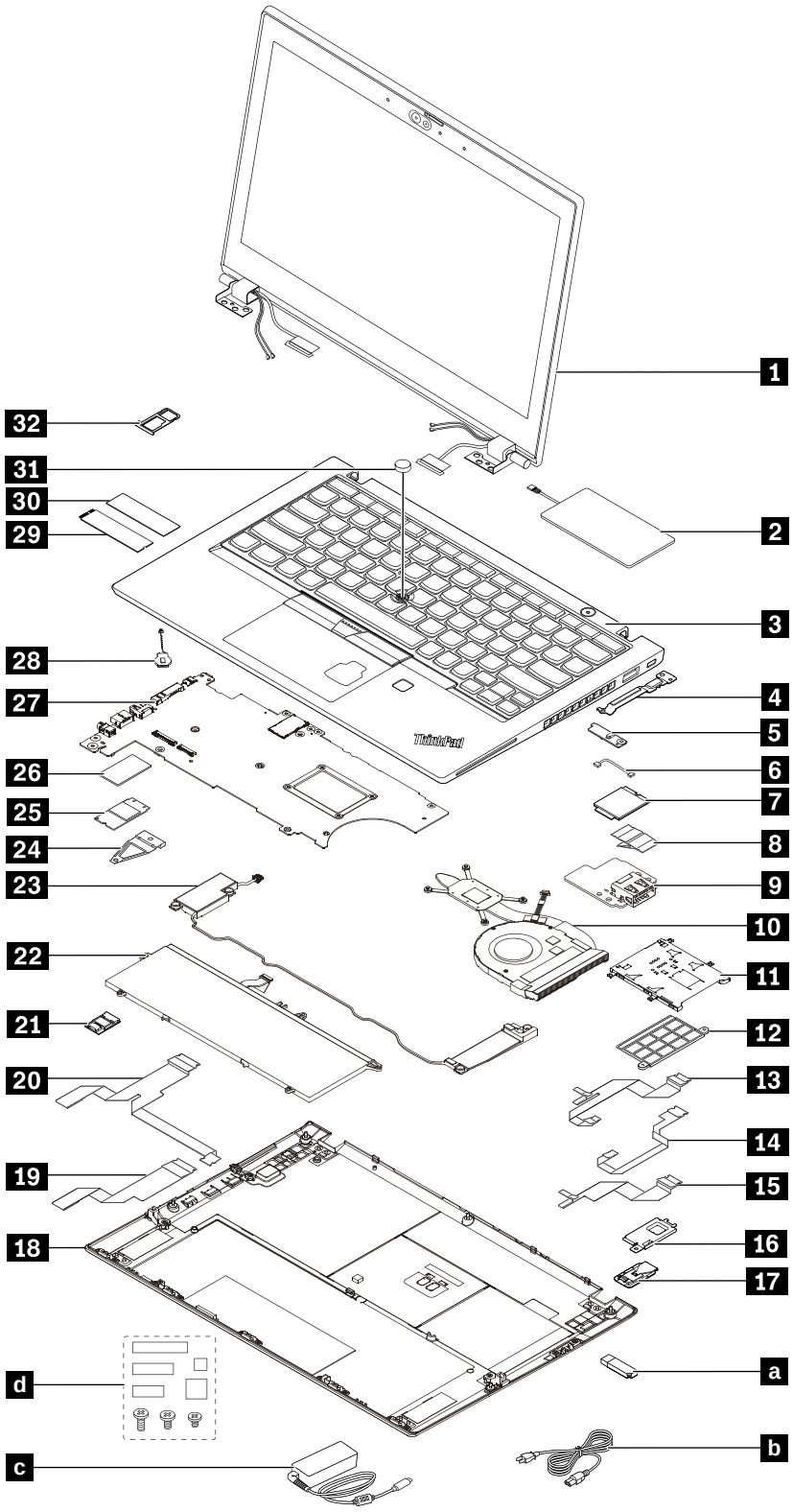

Table 6. Major FRUs and CRUs

No.	FRU description	Self-service CRU	Optional-service CRU
1	LCD unit	No	No
2	Trackpad	No	No
3	Keyboard assembly	No	No
4	Docking-station-connector bracket	No	No
5	Power card	No	No
6	Power-card cable	No	No
7	Wireless WAN card*	Yes	No
8	USB-card cable	No	No
9	USB card	No	No
10	Thermal fan assembly	No	No
11	Smart card reader*	No	No
12	Dummy smart card reader*	No	No
13	Fingerprint-reader-and-smart-card-reader cable*	No	No
14	Fingerprint-reader cable*	No	No
15	Smart-card-reader cable*	No	No
16	Fingerprint-reader bracket*	No	No
17	Fingerprint reader*	No	No
18	Base cover assembly	Yes	No
19	Trackpad cable (for non-NFC models)*	No	No
20	Trackpad cable (for NFC models)*	No	No
21	NFC card*	No	No
22	Built-in battery	No	No
23	Speaker assembly	No	No
24	M.2 2242 solid-state drive bracket*	Yes	No
25	M.2 2242 solid-state drive*	Yes	No
26	Thermal pad for M.2 2242 solid-state drive*	No	No
27	System board	No	No
28	Coin-cell battery	No	No
29	M.2 2280 solid-state drive*	Yes	No
30	Thermal pad for M.2 2280 solid-state drive*	No	No
31	TrackPoint cap	Yes	No
32	Nano-SIM-card and microSD-card tray	Yes	No
a	Lenovo factory recovery USB key*	Yes	No
b	Power cord	Yes	No

Table 6. Major FRUs and CRUs (continued)

No.	FRU description	Self-service CRU	Optional-service CRU
c	ac power adapter	Yes	No
d	Miscellaneous parts kits (see “Miscellaneous parts” on page 60)	No	No

* for selected models

ThinkPad X390

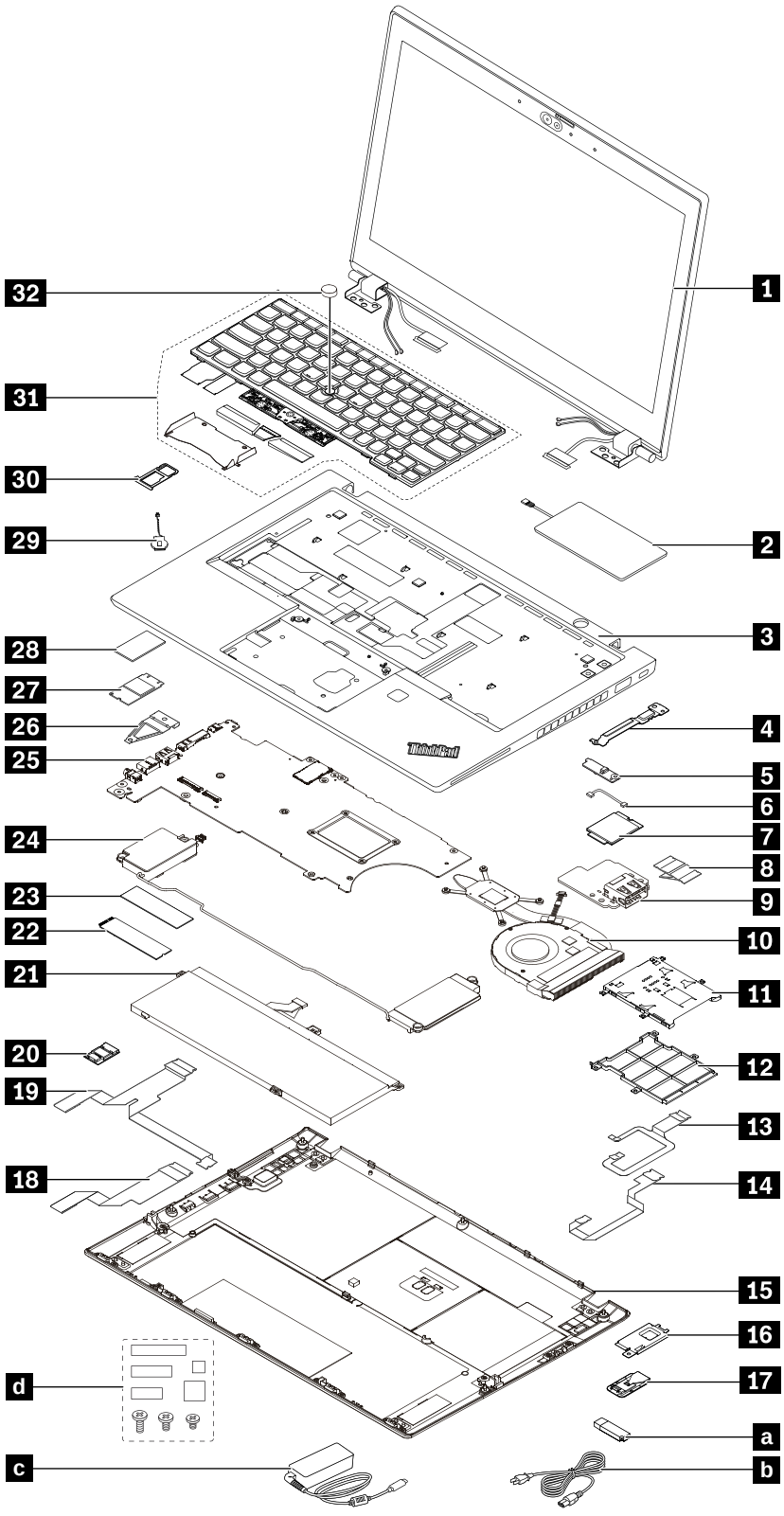

Table 7. Major FRUs and CRUs

No.	FRU description	Self-service CRU	Optional-service CRU
1	LCD unit	No	No
2	Trackpad	No	No
3	Keyboard bezel assembly	No	No
4	Docking-station-connector bracket	No	No
5	Power card	No	No
6	Power-card cable	No	No
7	Wireless WAN card*	Yes	No
8	USB-card cable	No	No
9	USB card	No	No
10	Thermal fan assembly	No	No
11	Smart card reader*	No	No
12	Dummy smart card reader*	No	No
13	Fingerprint-reader-and-smart-card-reader cable*	No	No
14	Fingerprint-reader cable*	No	No
15	Base cover assembly	Yes	No
16	Fingerprint-reader bracket*	No	No
17	Fingerprint reader*	No	No
18	Trackpad cable (for non-NFC models)*	No	No
19	Trackpad cable (for NFC models)*	No	No
20	NFC card*	No	No
21	Built-in battery	No	No
22	M.2 2280 solid-state drive*	Yes	No
23	Thermal pad for M.2 2280 solid-state drive*	No	No
24	Speaker assembly	No	No
25	System board	No	No
26	M.2 2242 solid-state drive bracket*	Yes	No
27	M.2 2242 solid-state drive*	Yes	No
28	Thermal pad for M.2 2242 solid-state drive*	No	No
29	Coin-cell battery	No	No
30	Nano-SIM-card and microSD-card tray	Yes	No
31	Keyboard	No	Yes
32	TrackPoint cap	Yes	No
a	Lenovo factory recovery USB key*	Yes	No
b	Power cord	Yes	No

Table 7. Major FRUs and CRUs (continued)

No.	FRU description	Self-service CRU	Optional-service CRU
c	ac power adapter	Yes	No
d	Miscellaneous parts kits (see “Miscellaneous parts” on page 60)	No	No

* for selected models

LCD FRUs and CRUs

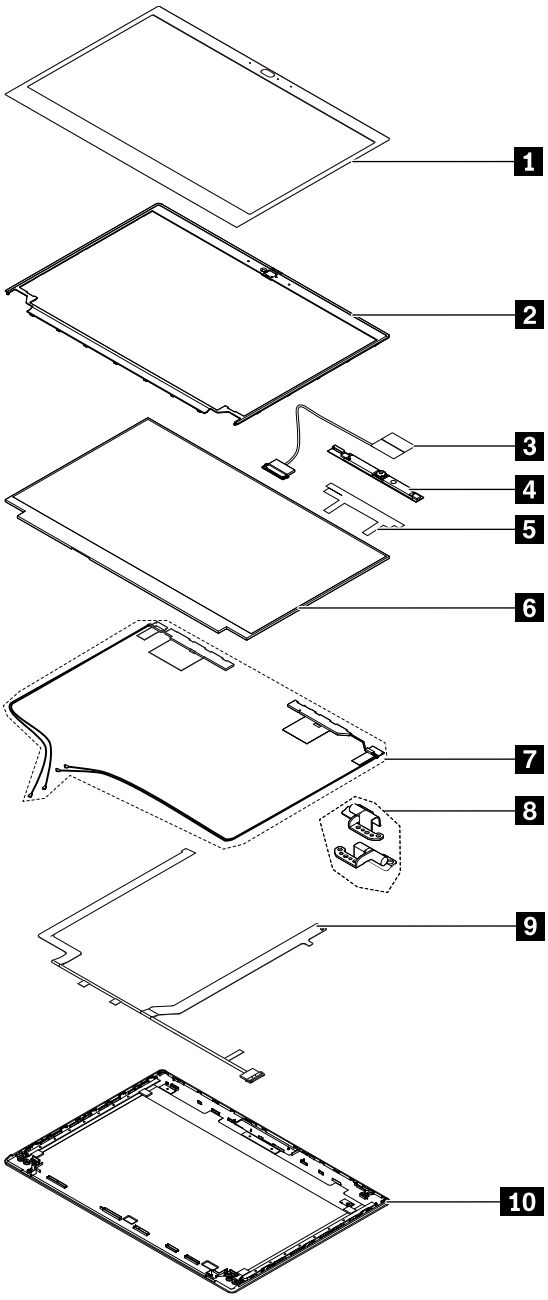

Table 8. LCD FRUs and CRUs

No.	FRU description	Self-service CRU	Optional-service CRU
1	LCD bezel cover	No	No
2	LCD bezel	No	No
3	LCD cable	No	No
4	Camera and microphone module	No	No
5	Aluminum foil (for ThinkPad T490s only)	No	No
6	LCD panel	No	No
7	Antenna kit	No	No
8	LCD hinges	No	No
9	Camera-and-microphone-module cable*	No	No
10	LCD cover assembly	No	No

* Depending on the computer model, the cable might look different from the illustration above. For more information about the cable types, see “2050 Camera-and-microphone-module cable and antenna kit” on page 101.

Miscellaneous parts

Table 9. Miscellaneous part

FRU descriptions	Self-service CRU	Optional-service CRU
Screw kit • For ThinkPad T490s: – M2 x L2, black (4) – M2 x L2.2 + 2.4, black (4) – M2.5 x L5, silver (6) – M2 x L2.2, black (10) – M2 x L3, silver (7) – M2 x L4.5, black (6) – M2.5 x L2.3, black (4) – Spec • For ThinkPad X390: – M2 x L1.8, silver (4) – M2.5 x L4.5, silver (6) – M2 x L3, silver (7) – M2 x L4.5, black (5) – M2.5 x L2.5, black (4) – M2 x L2.2 + 2.5, black (4) – M2 x L2.2, black (10) – Spec	No	No
Mechanical miscellaneous kit • Microphone rubber • WWAN card mylar • Smart card reader mylar • Spec	No	No
Label kit: • Label • Spec	No	No

Connector and cable guide

This topic provides information to help Lenovo authorized service technicians identify connectors and cables for replacement purpose. To view each FRU and the exploded illustration of the computer, see “Major FRUs and CRUs” on page 52 and “LCD FRUs and CRUs” on page 58.

Note: Depending on your computer model, some connectors or cables might not be available.

System board connectors and cables

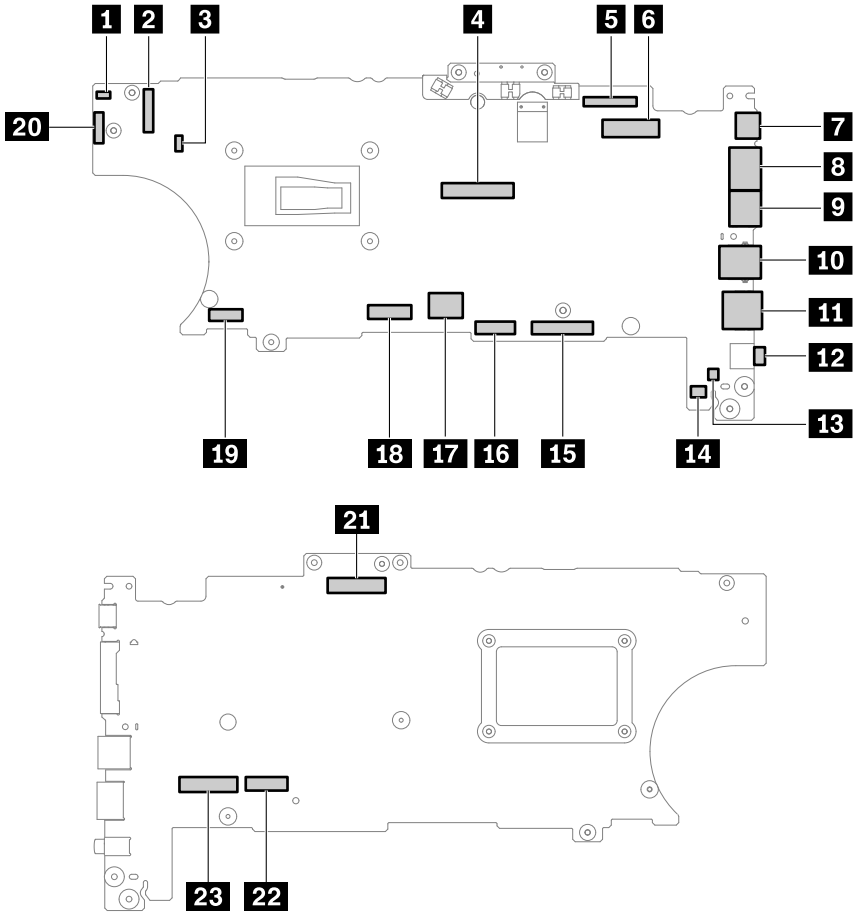

Table 10. System board connector and cable guide

No.	Connector/feature	Internal cable required	Cable connection
1	dc-in connector (internal)	dc-in cable	Connect one end to the power card and the other end to this connector.
2	Camera connector (internal)	camera-and-microphone-module cable	Connect one end to the camera and microphone module and the other end to this connector.
3	Thermal fan connector (internal)	Thermal fan cable	The thermal fan comes with the cable. Connect the cable to this connector.
4	Wireless-WAN card slot (internal)	No	Insert a wireless-WAN card into this slot.
5	LCD connector (internal)	LCD cable	Connect one end to the LCD panel and the other end to this connector.
6	Solid-state drive slot (internal)	No	Insert a solid state drive into this slot.
7	USB-C connector (USB 3.1 Gen 1) (external)	No	Connect a USB-C compatible device to this connector.

Table 10. System board connector and cable guide (continued)

No.	Connector/feature	Internal cable required	Cable connection
8	Thunderbolt 3 connector (USB-C) (external)	No	Connect a USB-C compatible or Thunderbolt 3 compatible device to this connector.
9	Ethernet extension connector Gen 2 (external)	No	This connector does not work individually. The connectors 6, 7, and 8 work together as the docking-station connector.
10	USB 3.1 connector Gen 1 (external)	No	Connect a USB-C compatible device to this connector.
11	HDMI connector (external)	No	Connect a compatible digital audio device or video monitor to this connector.
12	Audio connector (external)	No	Connect headphones or a headset with a 3.5-mm (0.14-inch) and 4-pole plug to this connector.
13	Coin-cell battery connector (internal)	Coin-cell battery cable	The coin-cell battery comes with cable. Connect the cable to this connector.
14	Speaker connector (internal)	Speaker cable	The speaker comes with the cable. Connect the cable to this connector.
15 16	Keyboard connectors for ThinkPad T490s (internal)	Keyboard assembly cables	The keyboard assembly comes with the cables. Connect the cables to these connectors.
17	Battery connector (internal)	No	The battery comes with the cable. Connect the cable to this connector.
18	Trackpad and NFC connector (internal)	Trackpad cable (for non-NFC models) or trackpad cable (for NFC models)	For Trackpad cable (for non-NFC models), connect one end to the trackpad and the other end to this connector. For Trackpad cable (for NFC models), connect one end to the trackpad, one end to the NFC card, and the other end to this connector.

Table 10. System board connector and cable guide (continued)

No.	Connector/feature	Internal cable required	Cable connection
19	Smart card reader and fingerprint reader connector (internal)	Smart-card-reader cable, fingerprint-reader cable, or smart card reader and fingerprint-reader cable	For smart-card-reader cable, connect one end to the smart card reader and the other end to this connector. For fingerprint-reader cable, connect one end to the fingerprint reader and the other end to this connector. For smart card reader and fingerprint-reader cable, connect one end of the cable to the smart card reader, one end to the fingerprint reader, and the other end to this connector.
20	Always On USB 3.1 connector Gen 1 (external)	No	Connect a USB-A compatible device to this connector.
21	Nano-SIM-card and microSD-card slot (external)	No	Insert a microSD card or Nano Subscriber Identity Module (SIM) card into this slot.
22 23	Keyboard connector for ThinkPad X390 (internal)	Keyboard assembly cables	The keyboard assembly comes with the cables. Connect the cables to these connectors.

Looking up FRU information

For detailed FRU information, including part numbers, descriptions, and substitution part numbers, go to: https://support.lenovo.com/partslookup

Chapter 7. FRU replacement notices

Read this chapter carefully before replacing any FRU.

Screw notices

Loose screws can cause a reliability problem. In the ThinkPad notebook computer, this problem is addressed with special nylon-coated screws that have the following characteristics:

- They maintain tight connections.
- They do not easily come loose, even with shock or vibration.
- They are harder to tighten.

Do the following when you service the computer:

- Keep the screw kit in your tool bag. For the part number of the screw kit, go to: https://support.lenovo.com/partslookup
- It is recommended to use new screws.
- It is recommended to use each screw only once.

Tighten screws as follows:

- **Plastic to plastic**

  Turn an additional angle of 90 degrees after the screw head touches the surface of the plastic part.

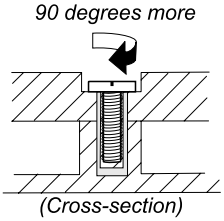

- **Logic card to plastic**

  Turn an additional angle of 180 degrees after the screw head touches the surface of the logic card.

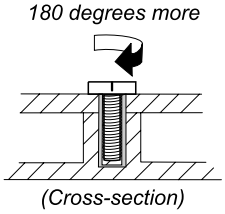

Notes:

- Ensure that you use the correct screw. It is recommended to use new screws for replacements. If you have a torque screwdriver, tighten all screws firmly to the torque specified in the screw information table for each step.
- Ensure torque screwdrivers are calibrated correctly following country specifications.

© Copyright Lenovo 2020

Retaining serial numbers

This topic provides instructions on the following:

- “Restoring the serial number of the system unit” on page 66
- “Retaining the UUID” on page 66

Restoring the serial number of the system unit

When the computer was manufactured, the EEPROM on the system board was loaded with the serial numbers of the system and all major components. These numbers need to remain the same throughout the life of the computer.

If you replace the system board, you must restore the serial number of the system unit to its original value.

The serial number of the system unit is written on the label attached to the bottom of the computer.

If you cannot find the serial number of the system unit on the bottom of the computer, try the following method to get the number:

Note: Before you perform the operation, ensure that the UEFI/Legacy setting within the **Startup** menu in the ThinkPad Setup program is set to **UEFI Only**.

1. Connect a USB memory key to the computer.
2. Go to https://www.lenovo.com/maintenanceutilities and follow the instructions on the screen to create a Maintenance Key.

   Note: Only an authorized Lenovo service technician can access the above Web site.
3. Restart the computer.
4. When the logo is displayed, press Esc. The ThinkPad Config Information Update Utility interface is displayed.
5. Type 1 under **Enter the action desired**, then press Enter. The ThinkPad Serial Number Update Utility for Asset ID screen is displayed.
6. Type 2 under **Enter the action desired**, then press Enter. The serial number of each device in your computer is displayed; the serial number of the system unit is listed as follows:
   20- Serial number
7. Record the serial number of the system unit.

After you replace the system board, do the following to restore the serial number of the system unit:

1. Connect the Maintenance Key to the computer.
2. When the logo is displayed, press Esc. The ThinkPad Config Information Update Utility interface is displayed.
3. Type 1 under **Enter the action desired**, then press Enter. The ThinkPad Serial Number Update Utility for Asset ID screen is displayed.
4. Type 1 under **Enter the action desired**, then press Enter. Then follow the instructions on the screen to restore the serial number of the system unit.

Retaining the UUID

The Universally Unique Identifier (UUID) is a 128-bit number uniquely assigned to your computer at production and stored in the EEPROM of your system board.

The algorithm that generates the number is designed to provide unique IDs until the year A.D. 3400. No two computers in the world have the same number.

When you replace the system board, perform the following steps to create a new UUID for the system board if the system board does not have a UUID:

Note: Before you perform the operation, ensure that the UEFI/Legacy setting within the **Startup** menu in the ThinkPad Setup program is set to **UEFI Only**.

1. Connect a USB memory key to the computer.
2. Go to https://www.lenovo.com/maintenanceutilities and follow the instructions on the screen to create a Maintenance Key.

   Note: Only an authorized Lenovo service technician can access the above Web site.
3. Restart the computer.
4. When the logo screen is displayed, press Esc. The ThinkPad Config Information Update Utility interface is displayed.
5. Type 2 under **Enter the action desired**, then press Enter. The Auto UUID generation utility interface is displayed.
6. Type y under **Change UUID. OK? [Y/N]**, then press Enter. A new UUID is created and written. If a valid UUID already exists, it is not overwritten.

Reading or writing the ECA information

Information on Engineering Change Announcements (ECA) is stored in the EEPROM of the system board. The electronic storage of this information simplifies the procedure to check if the ECA has been previously applied to a machine. The machine does not need to be disassembled to check for the ECA application.

To check what ECAs have been previously applied to the machine, use the ECA Information Read/Write function on the LENOVO ThinkPad Hardware Maintenance Diskette or Maintenance Key.

1. Insert the latest version of LENOVO ThinkPad Hardware Maintenance Diskette or Maintenance Key, and then restart the computer.
2. From the main menu, select **6. Set ECA Information**.
3. To read the ECA information, select **2. Read ECA/rework number from EEPROM** and follow the instructions on the screen. To read the box build date, select **5. Read box build date from EEPROM**, and follow the instruction on the screen.

After an ECA has been applied to the machine, the EEPROM must be updated to reflect the ECA's application. Use the latest version of LENOVO ThinkPad Hardware Maintenance Diskette or Maintenance Key to update the EEPROM.

Note: Only the ECA number is stored in the EEPROM. The machine type of the ECA is assumed to be the same as the machine type of the machine that had the ECA applied to it.

1. Insert the latest version of LENOVO ThinkPad Hardware Maintenance Diskette or Maintenance Key, and then restart the computer.
2. From the main menu, select **6. Set ECA Information**.
3. To write the ECA information, select **1. Write ECA/rework number from EEPROM**, and follow the instructions on the screen. To write the box build date, select **4. Write box build date from EEPROM**, and follow the instruction on the screen.

If the system board is being replaced, try to read the ECA information from the old system board and transfer the information to the new system. If the system board is inoperable, this will not be possible.

Chapter 8. Removing or replacing a FRU

This chapter provides instructions on how to remove or replace a FRU.

General guidelines

When removing or replacing a FRU, be sure to observe the following general guidelines:

1. Do not try to service any computer unless you have been trained and certified. An untrained person runs the risk of damaging parts.
2. Before replacing any FRU, review Chapter 7 “FRU replacement notices” on page 65.
3. Begin by removing any FRUs that have to be removed before replacing the failing FRU. Any such FRUs are listed at the beginning of each FRU replacement section. Remove them in the order in which they are listed.
4. Follow the correct sequence in the steps for removing a FRU, as given in the illustrations by the numbers in square callouts.
5. When turning a screw, turn it in the direction as given by the arrow in the illustration.
6. When removing a FRU, move it in the direction as given by the arrow in the illustration.
7. To put the new FRU in place, reverse the removal procedure and follow any notes that pertain to replacement.
8. When replacing a FRU, use the correct screws as shown in the replacement procedures.

DANGER

Before removing any FRU, turn off the computer, unplug all power cords from electrical outlets, disable the built-in battery, and then disconnect any interconnecting cables.

Attention:

- After replacing a FRU, do not turn on the computer until you have made sure that all screws, springs, and other small parts are in place and none are loose inside the computer. Verify this by shaking the computer gently and listening for rattling sounds. Metallic parts or metal flakes can cause electrical short circuits.
- The system board is sensitive to, and can be damaged by ESD. Before touching it, establish personal grounding by touching a ground point with one hand or by using an ESD strap.

Before servicing the computer

Carefully read this topic before servicing the computer.

Disabling the built-in battery

Before replacing any FRU, ensure that you disable Fast Startup first and then disable the built-in battery.

To disable Fast Startup:

1. Go to Control Panel and view by Large icons or Small icons.
2. Click **Power Options**, and then click **Choose what the power buttons do** on the left pane.
3. Click **Change settings that are currently unavailable** at the top.
4. If prompted by User Account Control (UAC), click **Yes**.

© Copyright Lenovo 2020

5. Clear the **Turn on fast startup** check box, and then click **Save changes**.

To disable the built-in battery:

1. Restart your computer. When the logo screen is displayed, immediately press F1 to enter the UEFI BIOS menu.
2. Select **Config → Power**. The **Power** submenu is displayed.
3. Select **Disable built-in battery** and press Enter.
4. Select **Yes** in the Setup Confirmation window. The built-in battery is disabled and the computer turns off automatically. Wait three to five minutes to let the computer cool.

Removing the nano-SIM-card and microSD-card tray

Note: If the computer you are servicing has a nano-SIM card or microSD card installed, remove the card with the tray together.

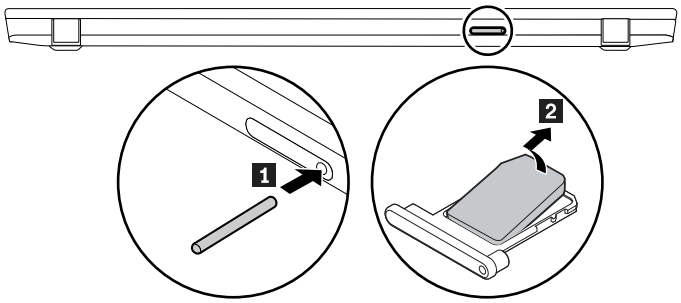

1010 Keyboard (for ThinkPad X390 only)

Removal steps

Note: If the keyboard must be removed to access other FRUs, you need the keyboard removal tool (product part number: 01LX856) to remove the keyboard. You can purchase the tool as a separate FRU at https://support.lenovo.com/partslookup.

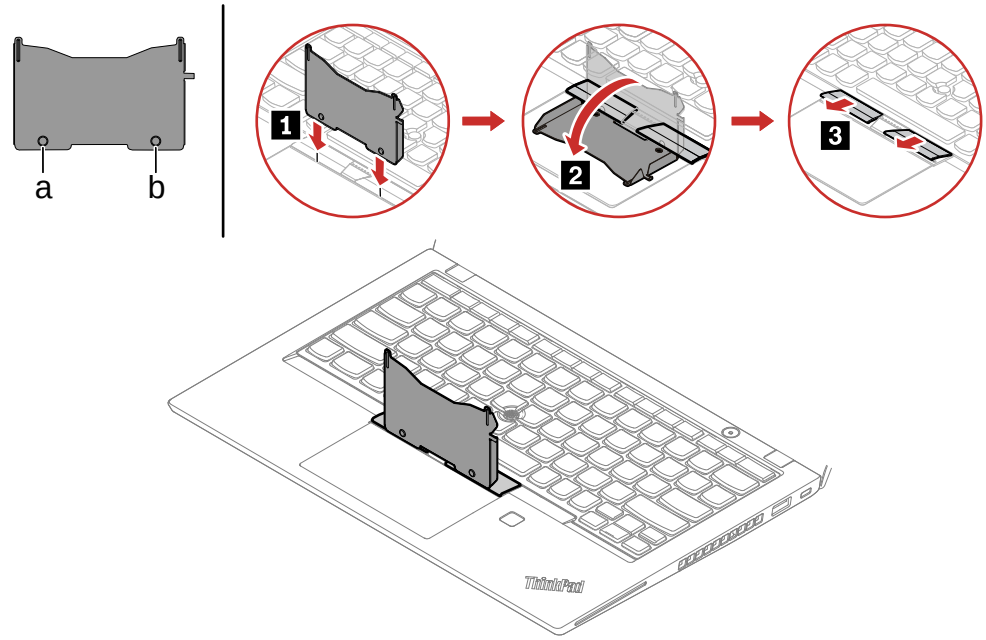

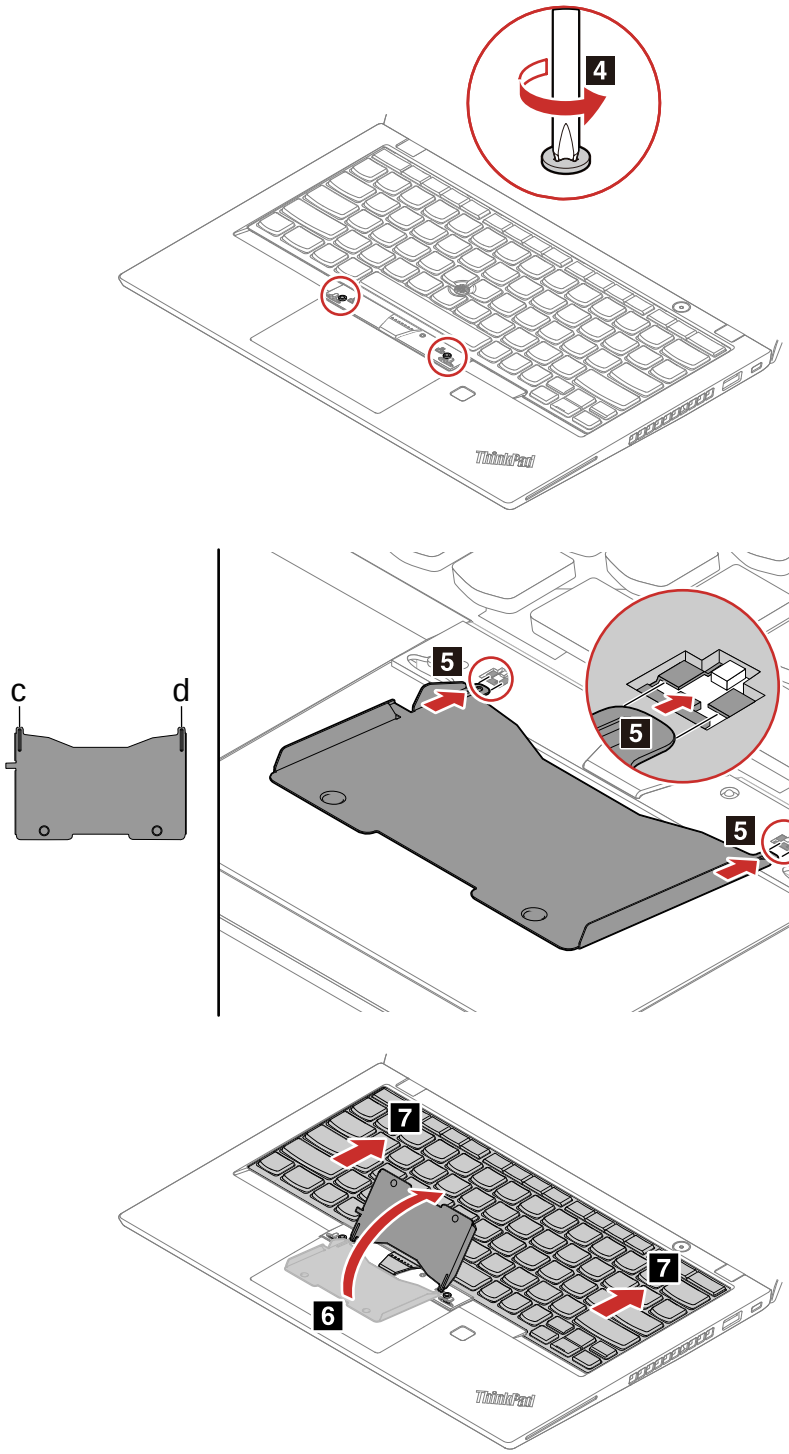
4
c
d
5
5
5
7
7
6

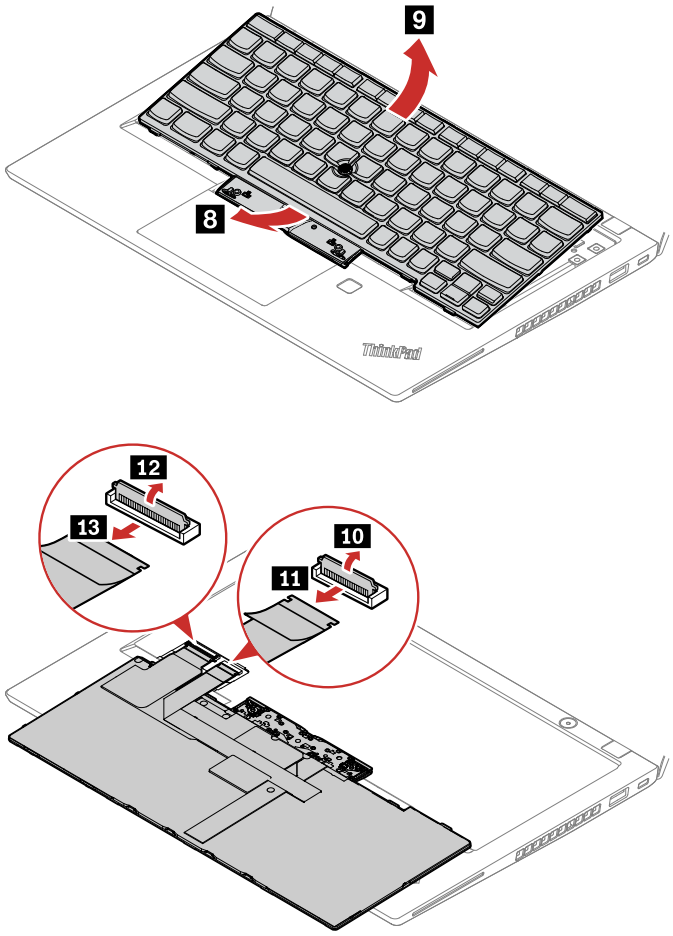

When installing: Ensure that the connectors are attached firmly.

1020 Base cover assembly

Removal steps

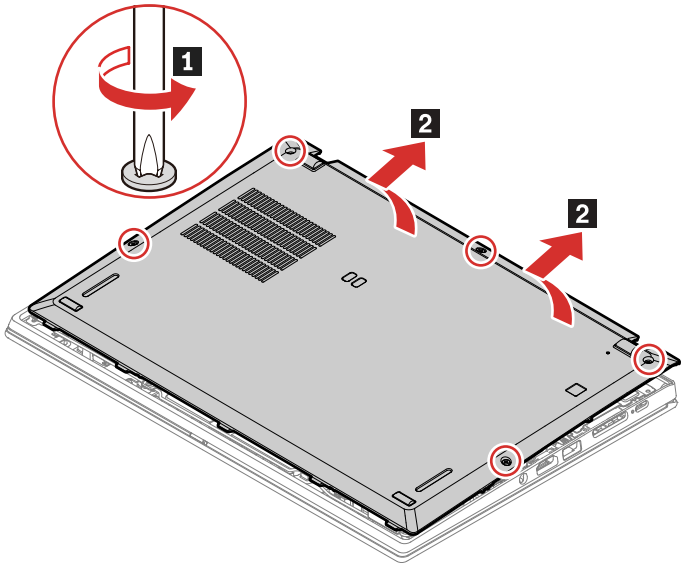

Applying labels to the base cover assembly

Note: Depending on the country or region of delivery, the labels might be slightly different from the ones in the following illustration.

The new base cover assembly FRU is shipped with a kit containing labels of several kinds. Apply those labels when you replace the base cover assembly. For the labels that are not shipped with the new base cover assembly, peel them from the old base cover assembly, and adhere them to the new one.

ThinkPad T490s

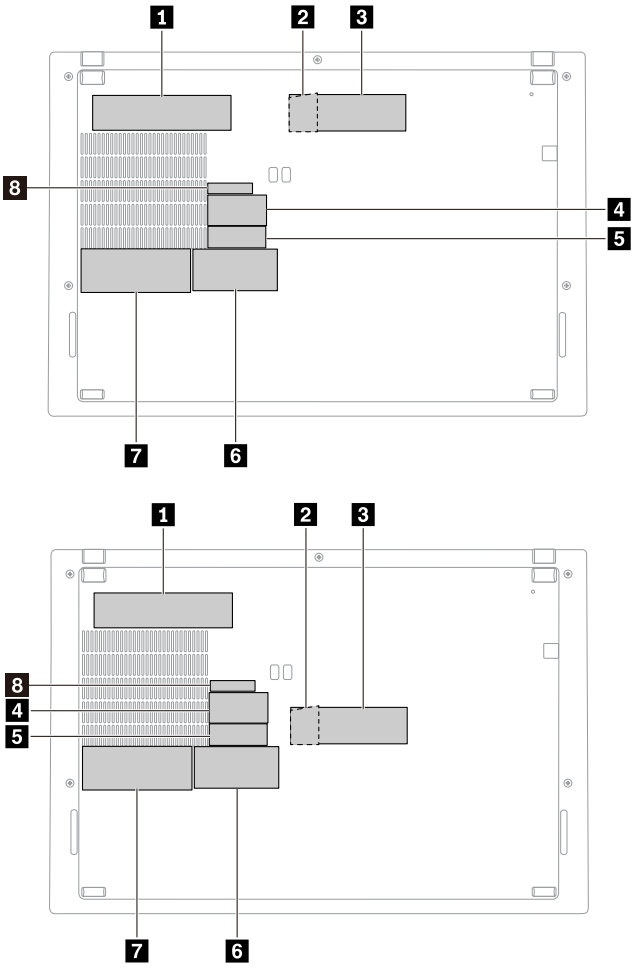

ThinkPad X390

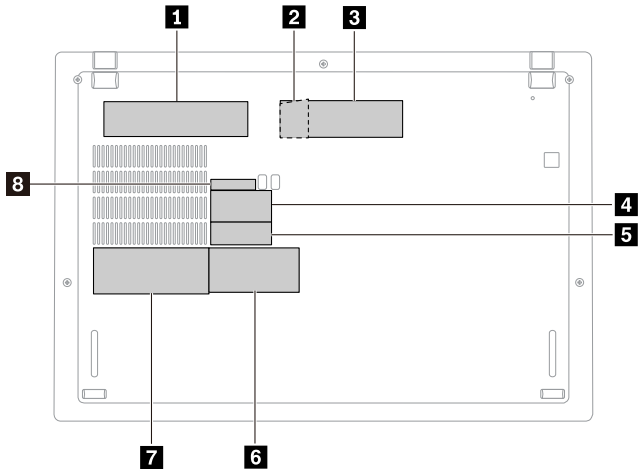

1 GEO and system label

2 Genuine Microsoft label (Windows 10)

3 COA label

4 IMEI label

5 S/N label

6 Asset tag

7 Country label

8 CMIIT label

1030 M.2 solid-state drive, bracket, and thermal pad

For access, remove this FRU:

- “1020 Base cover assembly” on page 72

Attention: The M.2 solid-state drive is sensitive. Inappropriate handling might cause damage and permanent loss of data.

When handling the M.2 solid-state drive, observe the following guidelines:

- Replace the M.2 solid-state drive only for upgrade or repair. The M.2 solid-state drive is not designed for frequent changes or replacement.
- Before replacing the M.2 solid-state drive, make a backup copy of all the data that you want to keep.
- Do not apply pressure to the M.2 solid-state drive.
- Do not touch the contact edge or circuit board of the M.2 solid-state drive. Otherwise the M.2 solid-state drive might get damaged.
- Do not make the M.2 solid-state drive subject to physical shocks or vibration. Put the M.2 solid-state drive on a soft material, such as cloth, to absorb physical shocks.

If your computer is installed with a hybrid solid-state drive (with Intel Optane memory), go to https://support.lenovo.com/docs/tg_ssd to know the details on how to replace it.

Removal steps of the long M.2 solid-state drive

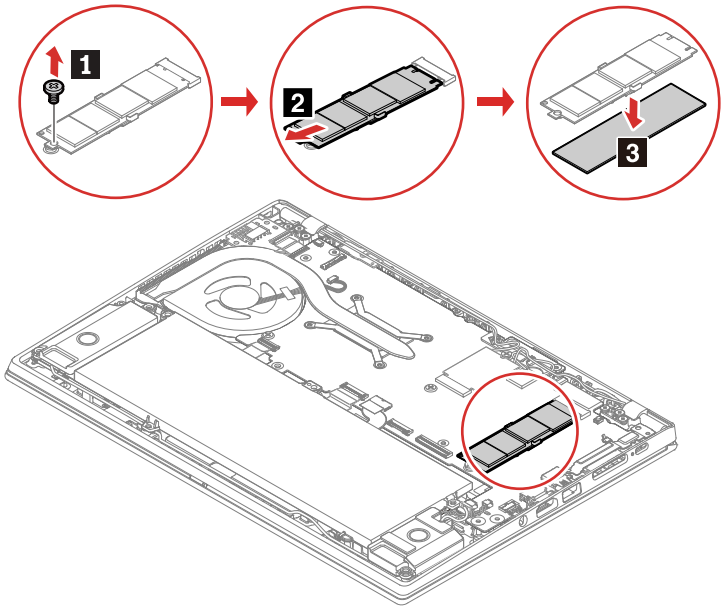

Step	Screw (quantity)	Color	Torque
1	M2 × 2.2 mm, flat-head, nylon-coated (1)	Black	0.181 Nm (1.85 kgf-cm)

Removal steps of the short M.2 solid-state drive

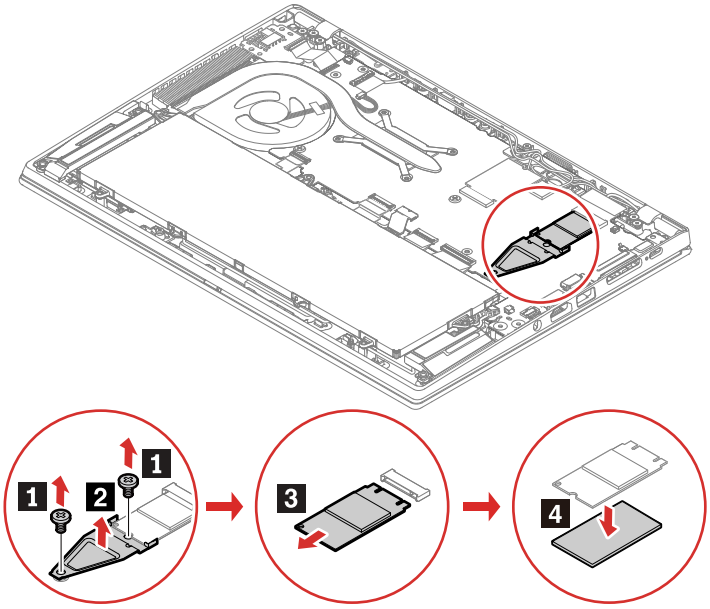

Step	Screw (quantity)	Color	Torque
1	M2 × 2.2 mm, flat-head, nylon-coated (2)	Black	0.181 Nm (1.85 kgf-cm)

1040 Wireless WAN card

For access, remove this FRU:

- “1020 Base cover assembly” on page 72

Removal steps

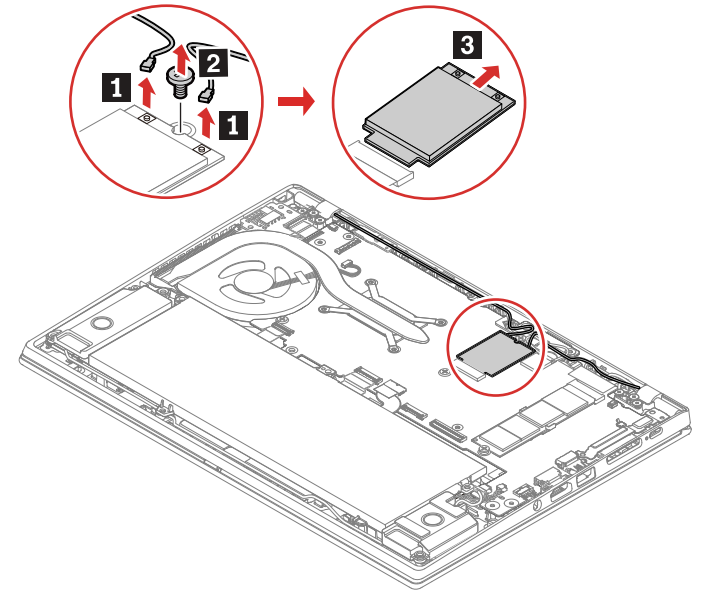

Step	Screw (quantity)	Color	Torque
2	M2 × 2.2 mm, flat-head, nylon-coated (1)	Black	0.181 Nm (1.85 kgf-cm)

When installing: Plug the orange cable into the main connector, and the blue cable into the auxiliary connector on the card.

1050 Docking-station-connector bracket

For access, remove this FRU:
- “1020 Base cover assembly” on page 72

Removal steps

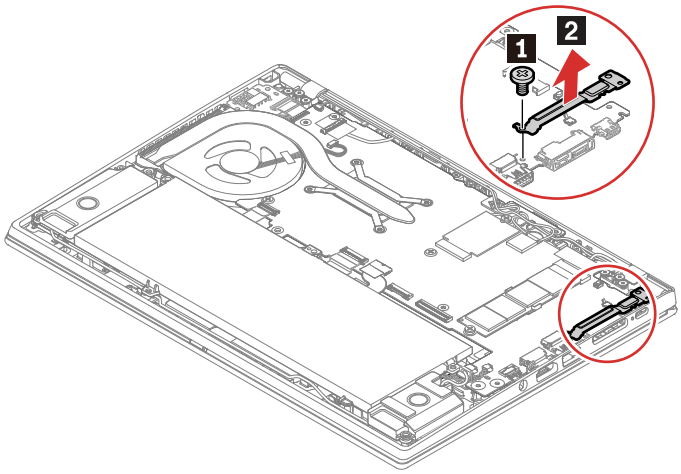

Step	Screw (quantity)	Color	Torque
1	M2 × 4.5 mm, flat-head, nylon-coated (1)	Black	0.181 Nm (1.85 kgf-cm)

When installing: Ensure that the two latches on the bracket are secured in place.

1060 Thermal fan assembly

For access, remove this FRU:
- “1020 Base cover assembly” on page 72

Removal steps

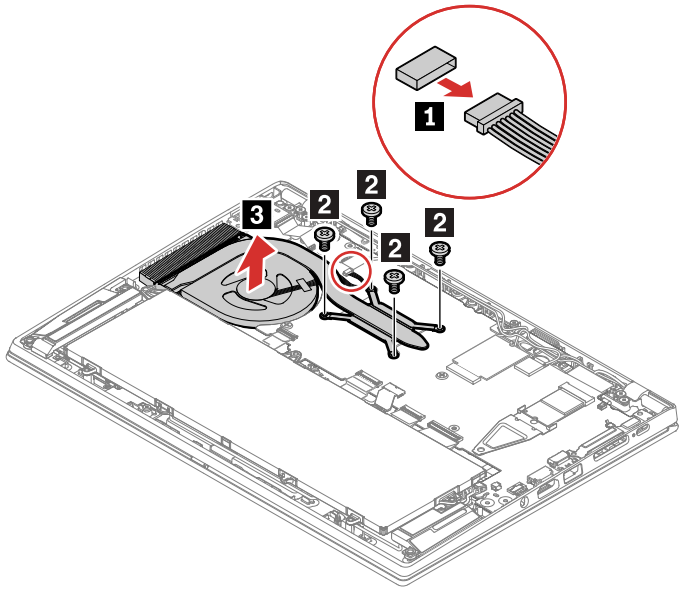

When installing:

- Ensure that the connector is attached firmly.
- Do not press the top of the fan cover and the fan hub.
- Before you attach the fan assembly to the computer, apply thermal grease, at an amount of 0.2 grams, on the part marked a as shown in the following illustrations. Either too much or too less application of grease can cause a thermal problem due to imperfect contact with a component.

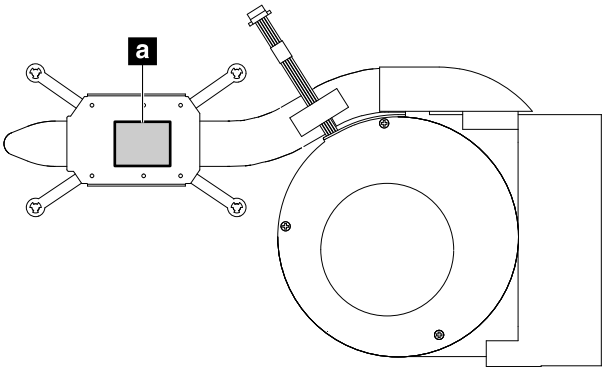

1070 USB-card cable and USB card

For access, remove these FRUs:

- “1020 Base cover assembly” on page 72
- “1060 Thermal fan assembly” on page 76

Removal steps of the USB-card cable

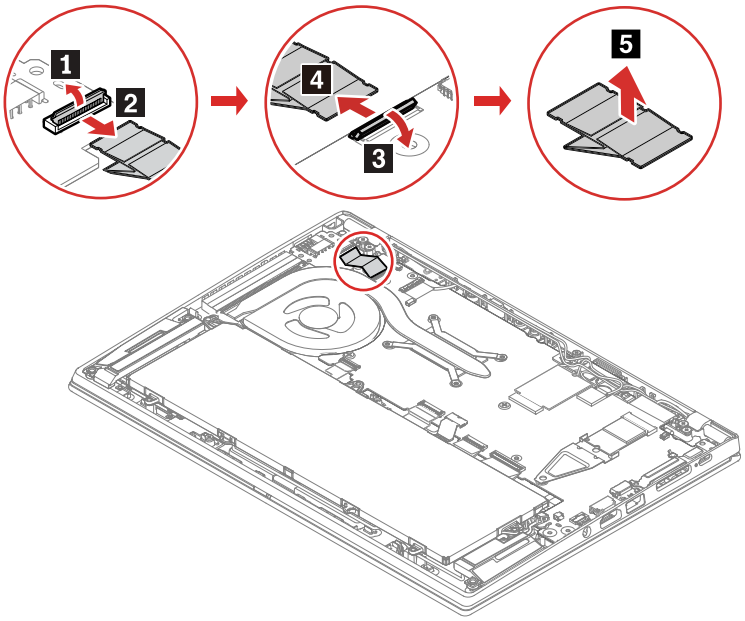

Removal steps of the USB card

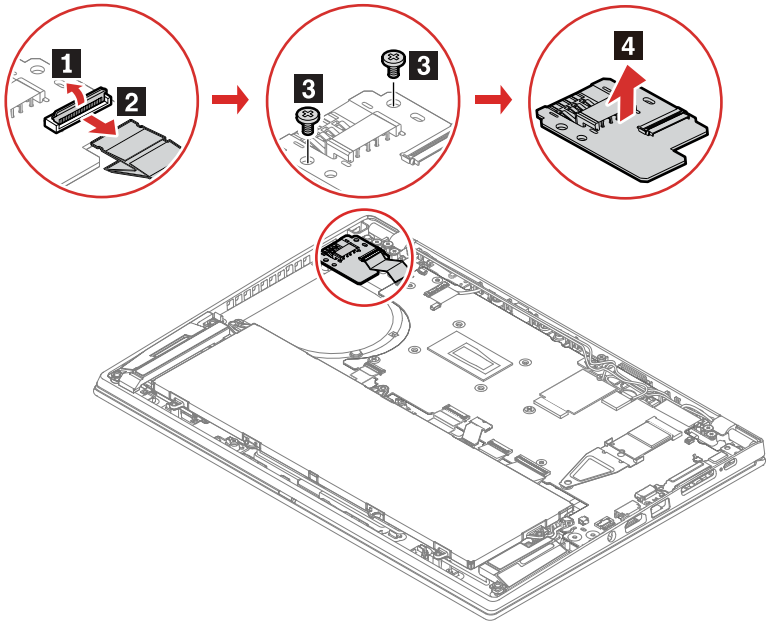

Step	Screw (quantity)	Color	Torque
3	M2 × 3 mm, flat-head, nylon-coated (2)	Silver	0.181 Nm (1.85 kgf-cm)

1080 Built-in battery

DANGER

Use only the authorized battery specified for the computer. Any other battery could ignite or explode.

Important notice for replacing a battery
Attention: Lenovo has no responsibility for the performance or safety of unauthorized batteries, and provides no warranties for failures or damage arising out of their use.
The Lenovo Vantage program provides an automatic battery diagnostic test that determines if the battery is defective. A battery FRU should not be replaced unless this diagnostic test shows that the battery is defective. The only exception to this is if the battery is physically damaged or a customer is reporting a possible safety issue. Note that a physically damaged battery is a non-warranty replacement part.

For access, remove this FRU:
- “1020 Base cover assembly” on page 72

Removal steps

ThinkPad T490s

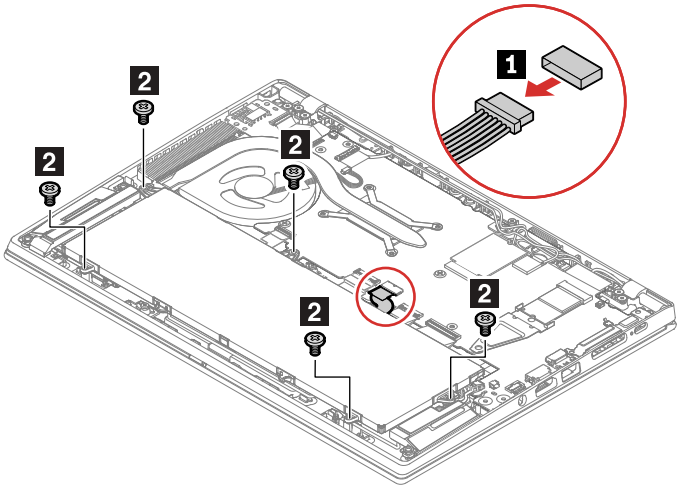

Step	Screw (quantity)	Color	Torque
2	M2 × 4.5 mm, flat-head, nylon-coated (5)	Black	0.181 Nm (1.85 kgf-cm)

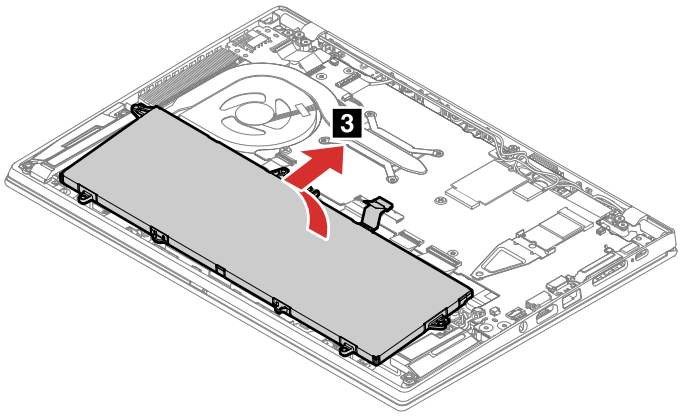

ThinkPad X390

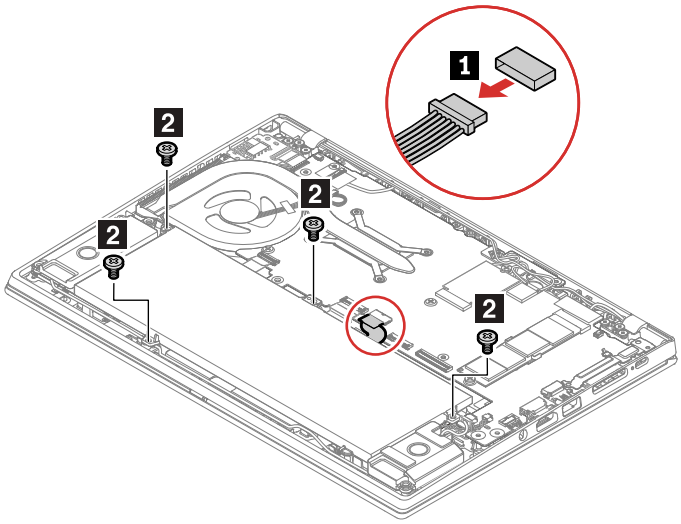

Step	Screw (quantity)	Color	Torque
2	M2 × 4.5 mm, flat-head, nylon-coated (4)	Black	0.181 Nm (1.85 kgf-cm)

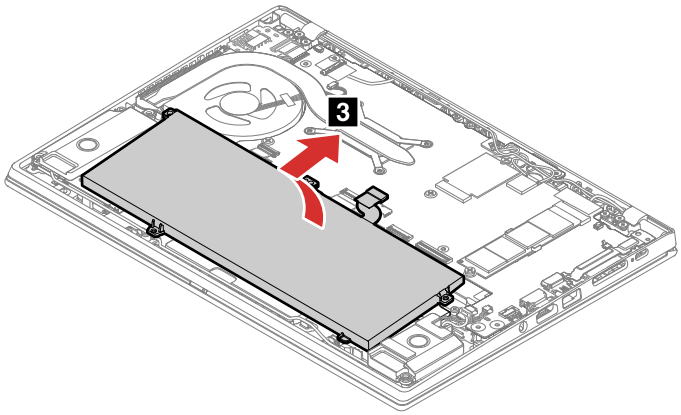

When installing:

- Ensure that the connector is attached firmly.
- Ensure that the base cover assembly is secured in place. Otherwise, the battery connection may fail.

1090 Coin-cell battery

DANGER

Use only the authorized battery specified for the computer. Any other battery could ignite or explode.

For access, remove these FRUs in order:
- “1020 Base cover assembly” on page 72
- “1080 Built-in battery” on page 79

Removal steps

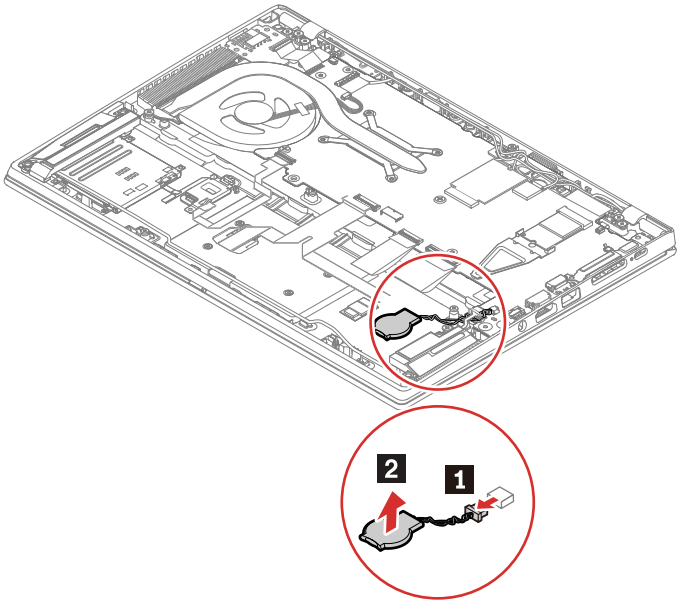

When installing: Ensure that the connector is attached firmly.

1100 Trackpad cable

For access, remove these FRUs in order:
- “1020 Base cover assembly” on page 72
- “1080 Built-in battery” on page 79

Removal steps of trackpad cable (for NFC models)

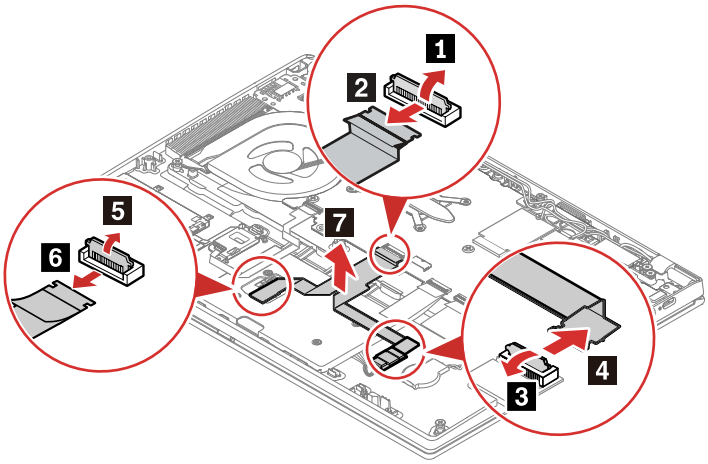

Removal steps of trackpad cable (for non-NFC model)

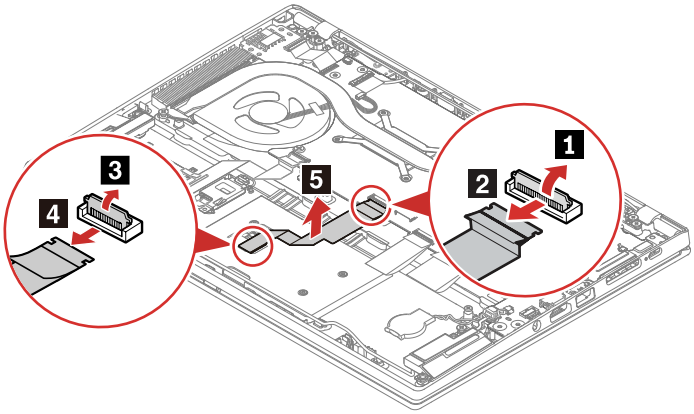

When installing: Ensure that the connectors are attached firmly.

1110 Trackpad

For access, remove these FRUs in order:

- “1020 Base cover assembly” on page 72
- “1080 Built-in battery” on page 79

Removal steps of trackpad (for NFC models)

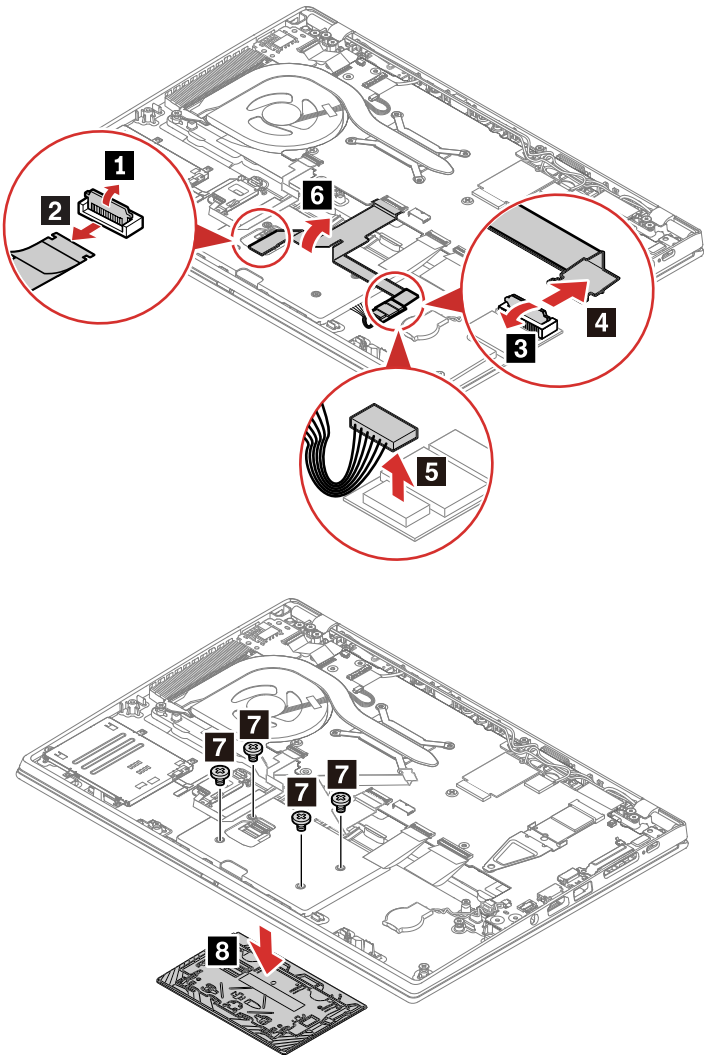

Table 11. Screw specification (ThinkPad T490s)

Step	Screw (quantity)	Color	Torque
7	M2 × 2 mm, flat-head, nylon-coated (4)	Black	0.181 Nm (1.85 kgf-cm)

Table 12. Screw specification (ThinkPad X390)

Step	Screw (quantity)	Color	Torque
7	M2 × 1.8 mm, flat-head, nylon-coated (4)	Silver	0.181 Nm (1.85 kgf-cm)

Removal steps of trackpad (for non-NFC model)

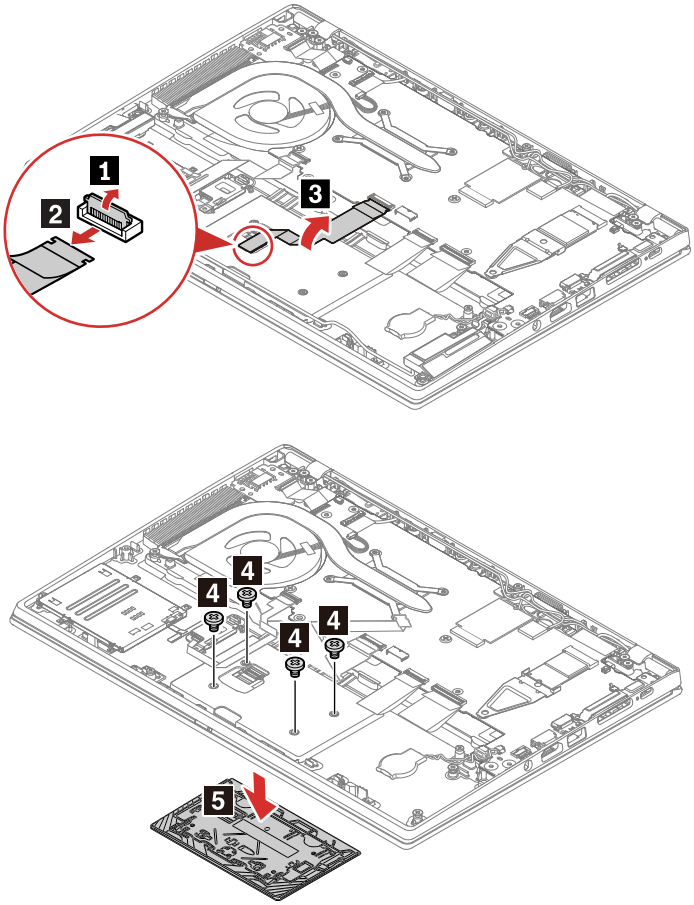

Table 13. Screw specification (ThinkPad T490s)

Step	Screw (quantity)	Color	Torque
4	M2 × 2 mm, flat-head, nylon-coated (4)	Black	0.181 Nm (1.85 kgf-cm)

Table 14. Screw specification (ThinkPad X390)

Step	Screw (quantity)	Color	Torque
4	M2 × 1.8 mm, flat-head, nylon-coated (4)	Silver	0.181 Nm (1.85 kgf-cm)

When installing: Ensure that the connectors are attached firmly.

1120 NFC card

For access, remove these FRUs in order:

- “1020 Base cover assembly” on page 72
- “1080 Built-in battery” on page 79

Removal steps

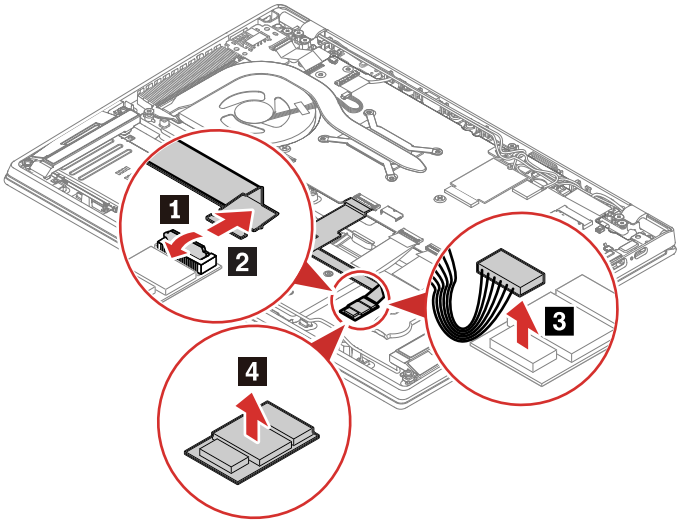

1130 Speaker assembly

For access, remove these FRUs in order:

- “1020 Base cover assembly” on page 72
- “1080 Built-in battery” on page 79

Removal steps

ThinkPad T490s

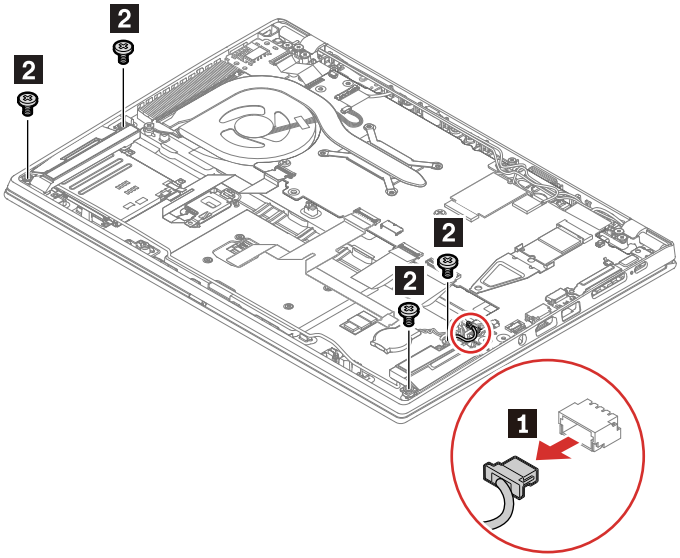

Step	Screw (quantity)	Color	Torque
2	M2 x (2.2 + 2.4) mm, flat-head, nylon-coated (4)	Black	0.181 Nm (1.85 kgf-cm)

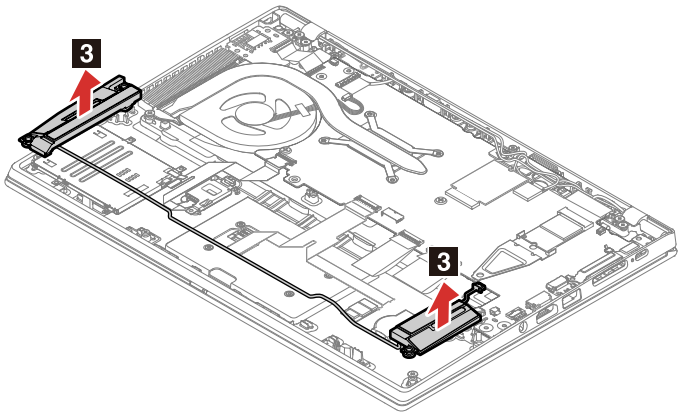

ThinkPad X390

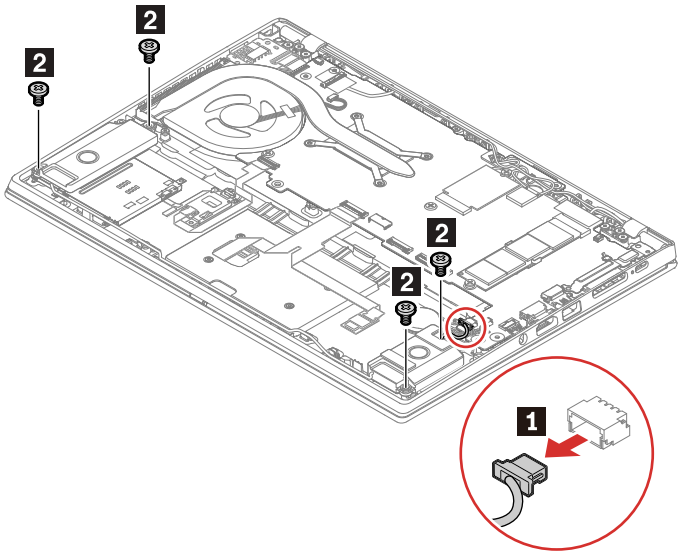

Step	Screw (quantity)	Color	Torque
2	M2 x (2.2 + 2.5) mm, flat-head, nylon-coated (4)	Black	0.181 Nm (1.85 kgf-cm)

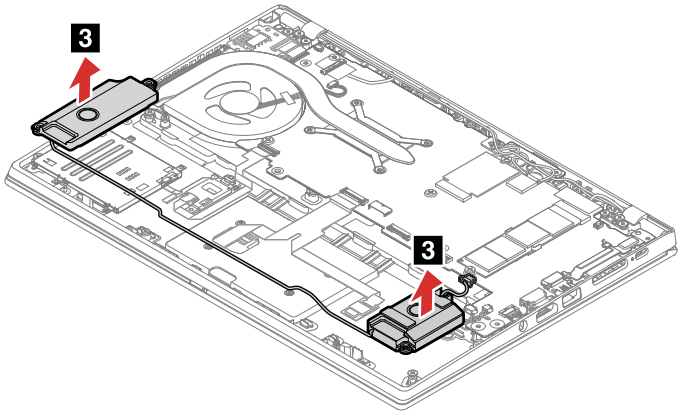

When installing:

- Ensure that the connector is attached firmly.

- Ensure that the cable is routed properly.

1140 Fingerprint-reader-and-smart-card-reader cable, fingerprint-reader cable, and smart-card-reader cable (for ThinkPad T490s only)

For access, remove these FRUs in order:
- “1020 Base cover assembly” on page 72
- “1080 Built-in battery” on page 79

ThinkPad T490s

- Removal steps of the fingerprint-reader-and-smart-card-reader cable

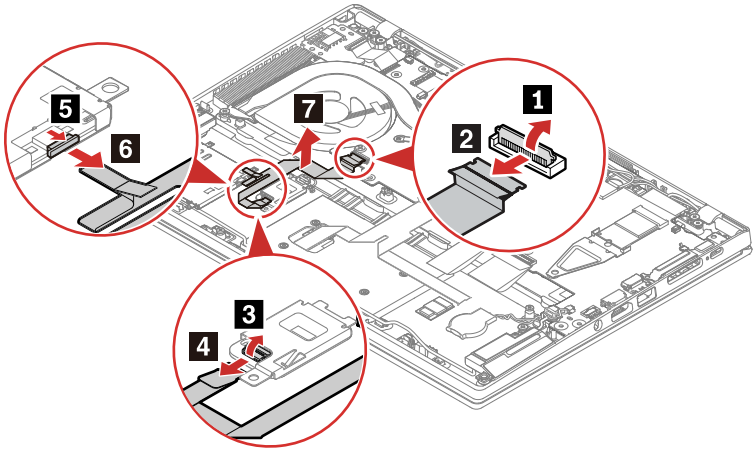

- Removal steps of the fingerprint-reader cable

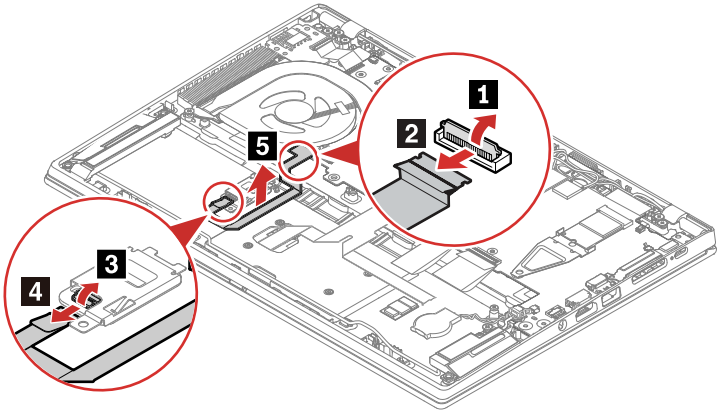

- Removal steps of the smart-card-reader cable

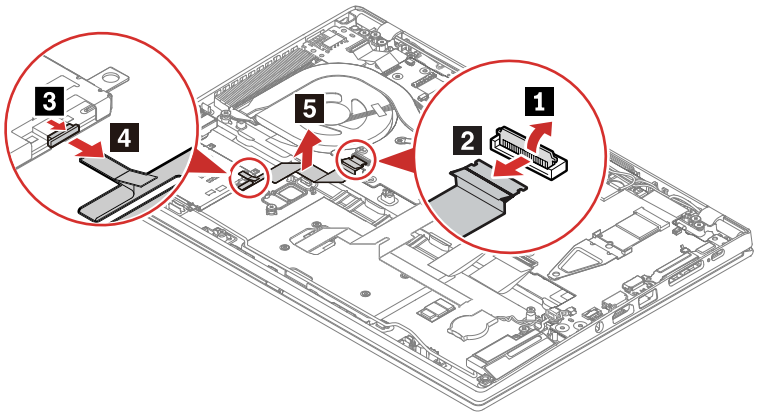

ThinkPad X390

- Removal steps of the fingerprint-reader-and-smart-card-reader cable

  Note: For models without fingerprint reader, skip step 3 and 4.

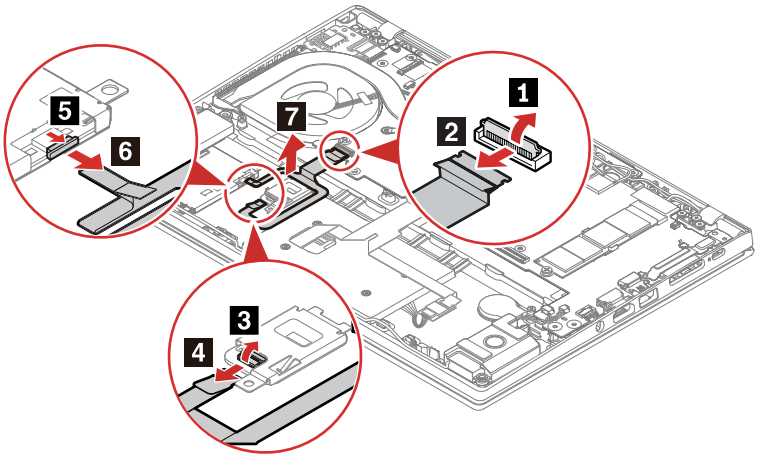

- Removal steps of the fingerprint-reader cable

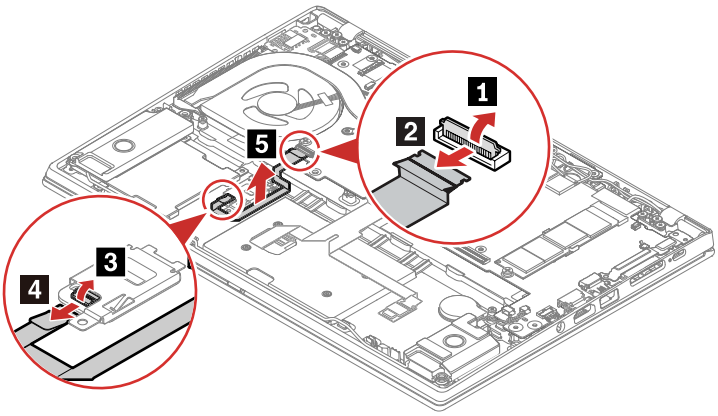

When installing: Ensure that the connectors are attached firmly.

1150 Fingerprint-reader bracket and fingerprint reader

For access, remove these FRUs in order:

- “1020 Base cover assembly” on page 72
- “1080 Built-in battery” on page 79
- “1140 Fingerprint-reader-and-smart-card-reader cable, fingerprint-reader cable, and smart-card-reader cable (for ThinkPad T490s only)” on page 87

Removal steps

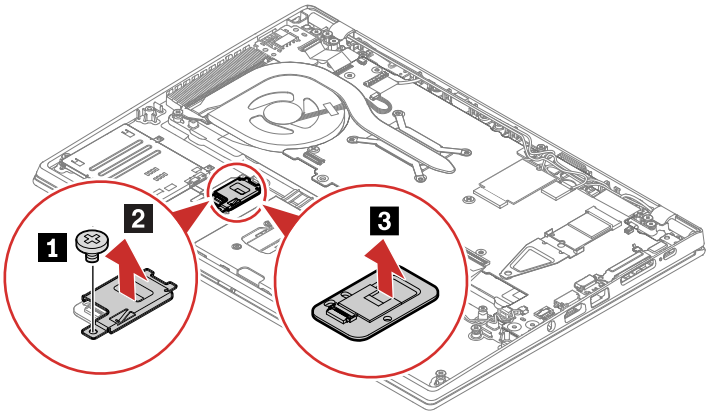

Step	Screw (quantity)	Color	Torque
1	M2 × 2.2 mm, flat-head, nylon-coated (1)	Black	0.181 Nm (1.85 kgf-cm)

1160 Smart card reader or dummy smart card reader

For access, remove these FRUs in order:
- “1020 Base cover assembly” on page 72
- “1080 Built-in battery” on page 79
- “1130 Speaker assembly” on page 85
- “1140 Fingerprint-reader-and-smart-card-reader cable, fingerprint-reader cable, and smart-card-reader cable (for ThinkPad T490s only)” on page 87

ThinkPad T490s

Removal steps of the smart card reader

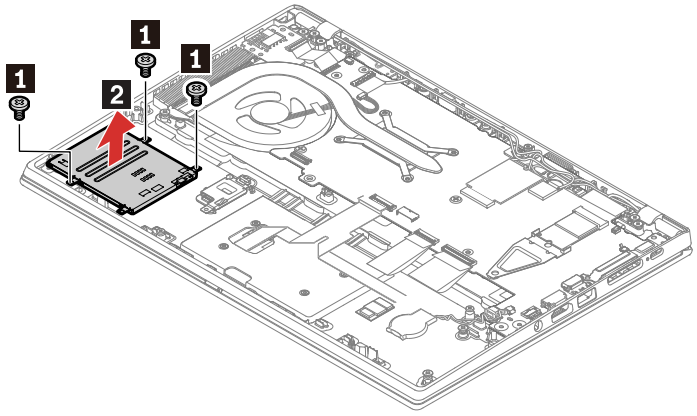

Step	Screw (quantity)	Color	Torque
1	M2 × 2.2 mm, flat-head, nylon-coated (3)	Black	0.181 Nm (1.85 kgf-cm)

Removal steps of the dummy smart card reader

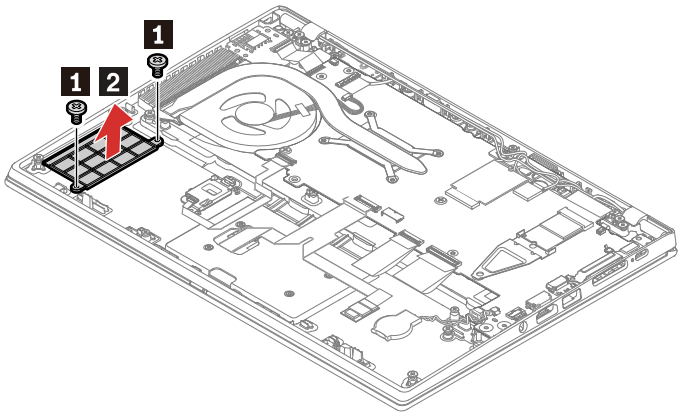

Step	Screw (quantity)	Color	Torque
1	M2 × 2.2 mm, flat-head, nylon-coated (2)	Black	0.181 Nm (1.85 kgf-cm)

ThinkPad X390

Removal steps of the smart card reader

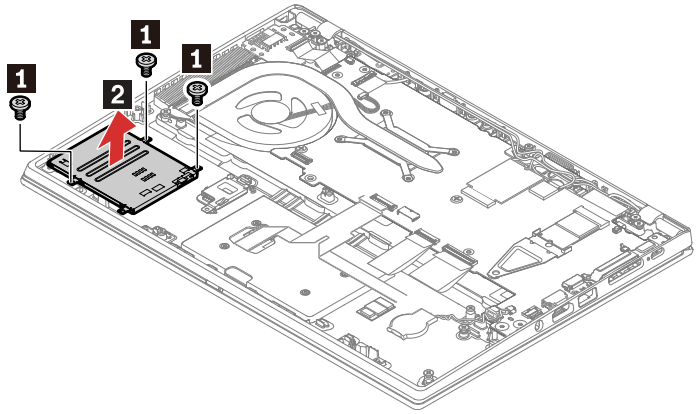

Step	Screw (quantity)	Color	Torque
1	M2 × 2.2 mm, flat-head, nylon-coated (3)	Black	0.181 Nm (1.85 kgf-cm)

Removal steps of the dummy smart card reader

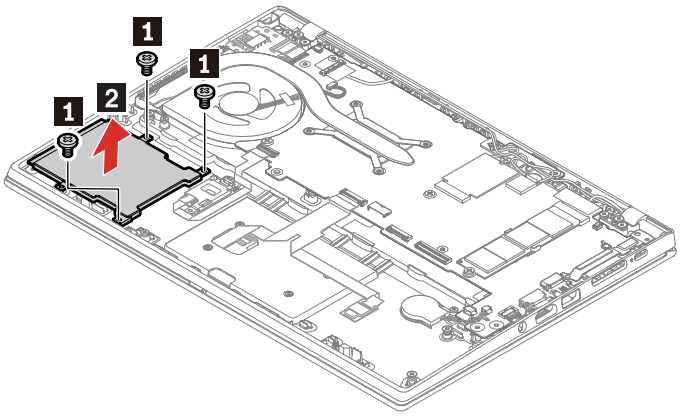

Step	Screw (quantity)	Color	Torque
1	M2 × 2.2 mm, flat-head, nylon-coated (3)	Black	0.181 Nm (1.85 kgf-cm)

1170 System board

Important notices for handling the system board:

When handling the system board, read the following:

- The system board has an accelerometer, which can be broken when several thousands of G-forces are applied.

  Note: Dropping a system board from a height of as little as 6 inches so that it falls flat on a hard bench can subject the accelerometer to as much as 6000 G's of shock.
- Be careful not to drop the system board on a bench top that has a hard surface, such as metal, wood, or composite.
- Avoid rough handling of any kind.
- At every point in the process, be sure not to drop or stack the system board.
- If you put a system board down, be sure to put it only on a padded surface such as an ESD mat or a corrugated conductive surface.

ThinkPad T490s and ThinkPad X390 share a common system board. After replacing the system board, you will be prompted to input a brand name to correctly identify the machine type. The following table contains the brand name required to complete this step.

Note: Input the exact brand name as shown in this table.

Brand name	Machine types
ThinkPad T490s	20NX and 20NY
ThinkPad X390	20Q0 and 20Q1

For access, remove these FRUs in order:

ThinkPad T490s	ThinkPad X390
• “1020 Base cover assembly” on page 72 • “1030 M.2 solid-state drive, bracket, and thermal pad” on page 73 • “1040 Wireless WAN card” on page 75 • “1050 Docking-station-connector bracket” on page 76 • “1060 Thermal fan assembly” on page 76 • “1080 Built-in battery” on page 79	• “1010 Keyboard (for ThinkPad X390 only)” on page 70 • “1020 Base cover assembly” on page 72 • “1030 M.2 solid-state drive, bracket, and thermal pad” on page 73 • “1040 Wireless WAN card” on page 75 • “1050 Docking-station-connector bracket” on page 76 • “1060 Thermal fan assembly” on page 76

Removal steps

ThinkPad T490s

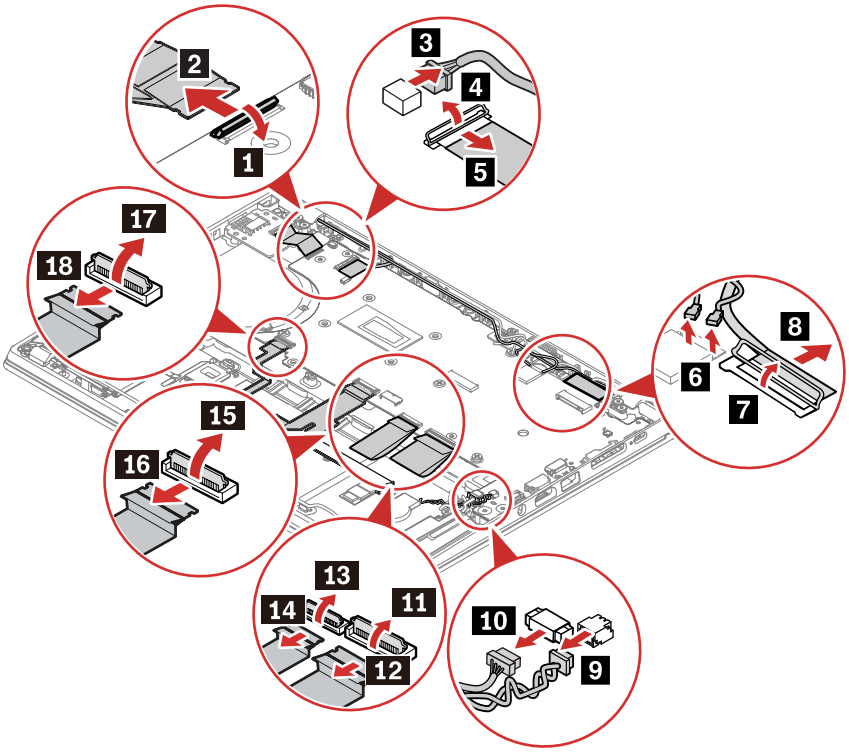

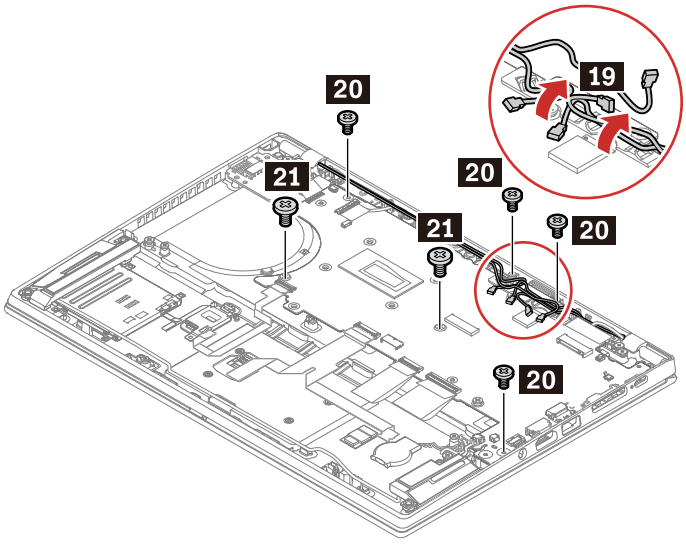

Step	Screw (quantity)	Color	Torque
20	M2 × 3 mm, flat head, nylon-coated (4)	Silver	0.181 Nm (1.85 kgf-cm)
21	M2 × 2.2 mm, flat head, nylon-coated (2)	Black	0.181 Nm (1.85 kgf-cm)

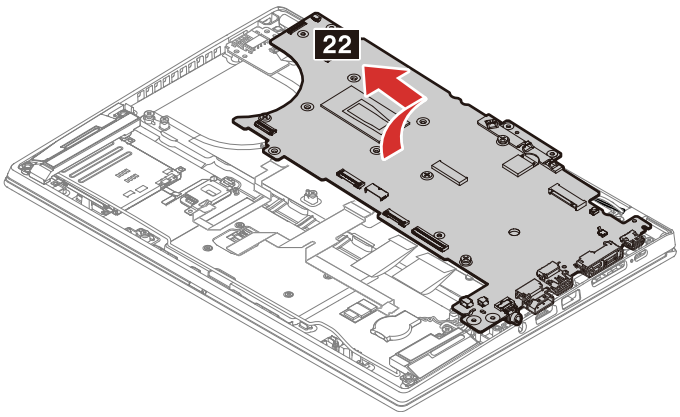

When installing: Ensure that the connectors are attached firmly.

ThinkPad X390

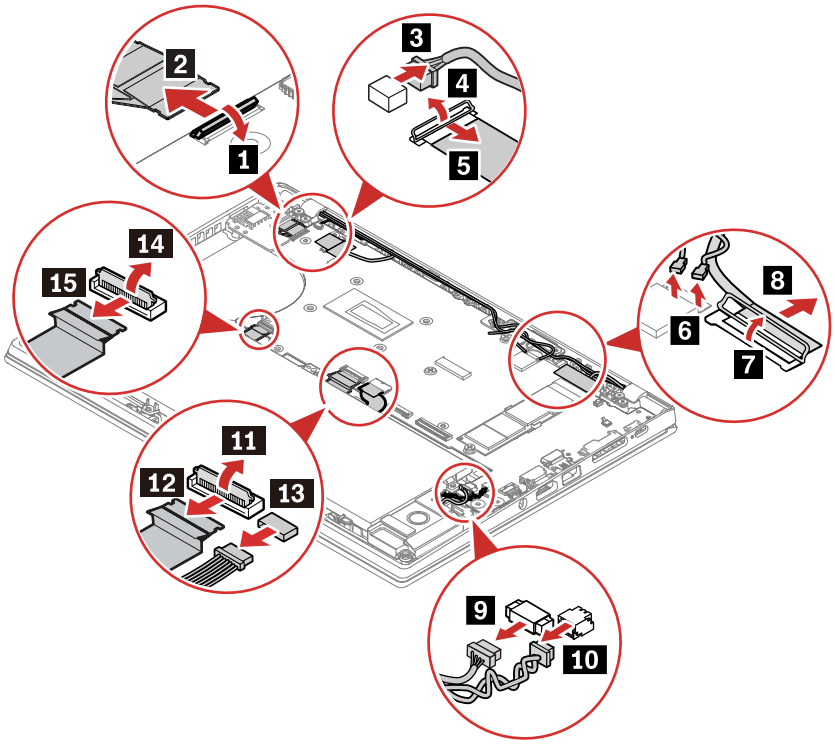

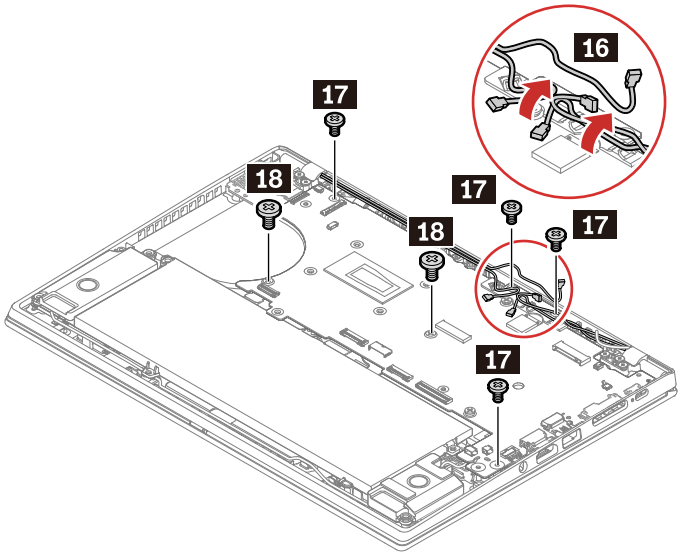

Step	Screw (quantity)	Color	Torque
17	M2 × 3 mm, flat head, nylon-coated (4)	Silver	0.181 Nm (1.85 kgf-cm)
18	M2 × 2.2 mm, flat head, nylon-coated (2)	Black	0.181 Nm (1.85 kgf-cm)

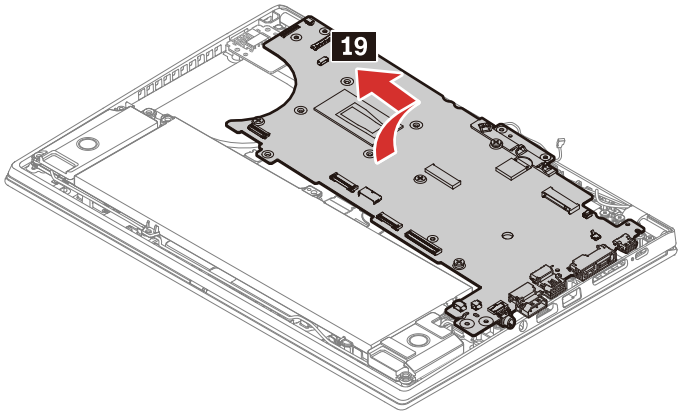

When installing: Ensure that the connectors are attached firmly.

Attention: The Central Processing Unit (CPU) a soldered on the top side of the system board is extremely sensitive. When you service the system board, avoid any kind of rough handling.

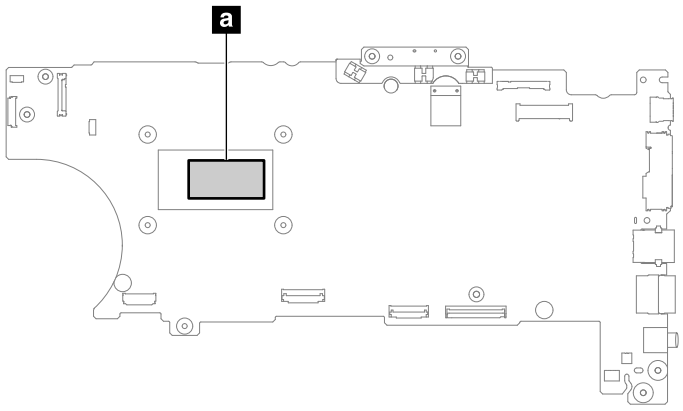

1180 Power-card cable and power card

Removal steps of the power-card cable

For access, remove this FRU:

- “1020 Base cover assembly” on page 72

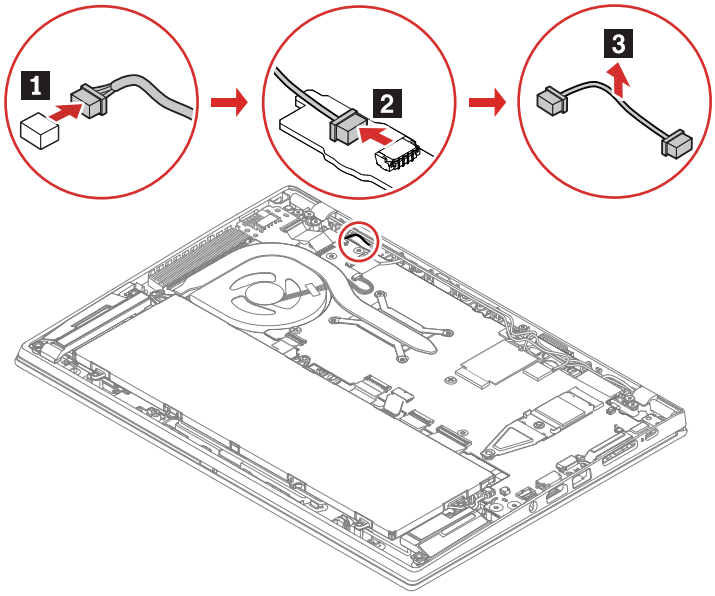

Removal steps of the power card

For access, remove these FRUs in order:

ThinkPad T490s	ThinkPad X390
• “1020 Base cover assembly” on page 72 • “1030 M.2 solid-state drive, bracket, and thermal pad” on page 73 • “1040 Wireless WAN card” on page 75 • “1050 Docking-station-connector bracket” on page 76 • “1060 Thermal fan assembly” on page 76 • “1080 Built-in battery” on page 79 • “1170 System board” on page 91	• “1010 Keyboard (for ThinkPad X390 only)” on page 70 • “1020 Base cover assembly” on page 72 • “1030 M.2 solid-state drive, bracket, and thermal pad” on page 73 • “1040 Wireless WAN card” on page 75 • “1050 Docking-station-connector bracket” on page 76 • “1060 Thermal fan assembly” on page 76 • “1170 System board” on page 91

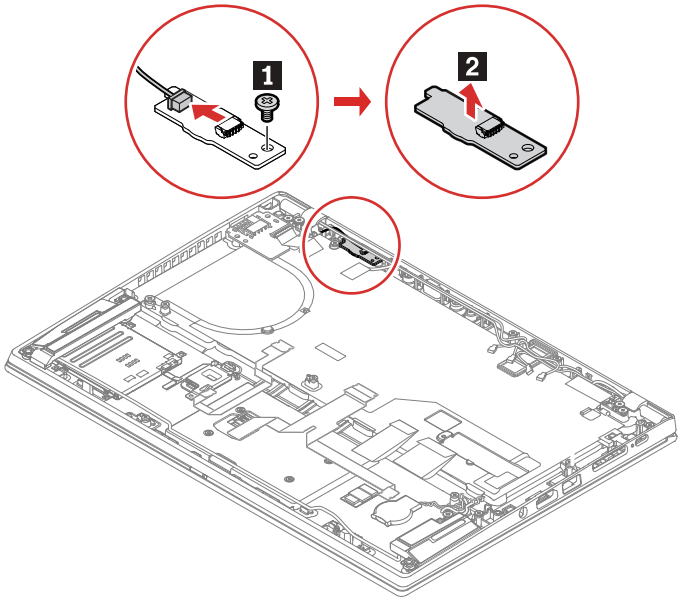

Step	Screw (quantity)	Color	Torque
1	M2 × 3 mm, flat-head, nylon-coated (1)	Silver	0.181 Nm (1.85 kgf-cm)

When installing: Ensure that the connector is attached firmly.

1190 LCD unit

For access, remove this FRU:
- “1020 Base cover assembly” on page 72

Removal steps

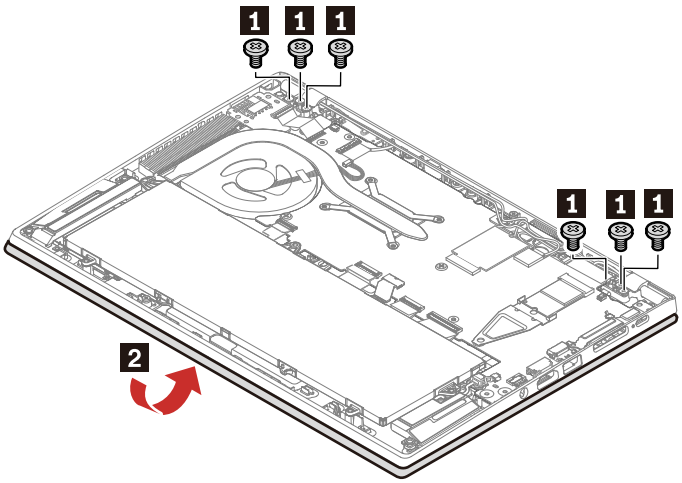

Table 15. Screw specification (ThinkPad T490s)

Step	Screw (quantity)	Color	Torque
1	M 2.5 × 5 mm, flat-head, nylon-coated (6)	Silver	0.294 Nm (3.0 kgf-cm)

Table 16. Screw specification (ThinkPad X390)

Step	Screw (quantity)	Color	Torque
1	M 2.5 × 4.5 mm, flat-head, nylon-coated (6)	Silver	0.294 Nm (3.0 kgf-cm)

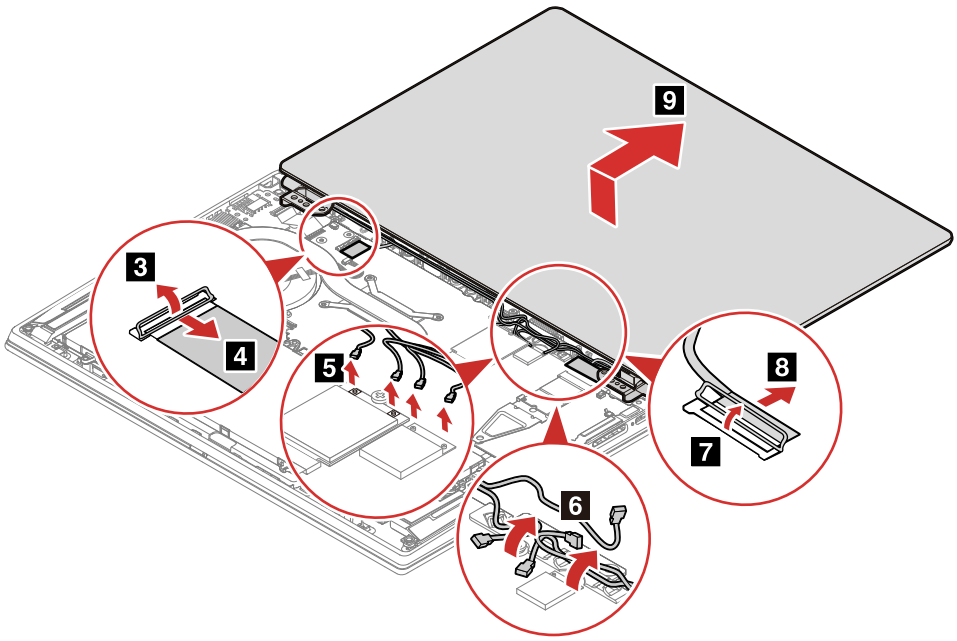

When installing: Ensure that the connectors are attached firmly.

Attention: When you route the cables, ensure that they are not subject to any tension. Tension could cause the cables to be damaged by the cable guides, or a wire to be broken.

1200 Keyboard assembly (for ThinkPad T490s) or Keyboard bezel assembly (for ThinkPad X390)

ThinkPad T490s	ThinkPad X390
For access, remove these FRUs in order: • “1020 Base cover assembly” on page 72 • “1030 M.2 solid-state drive, bracket, and thermal pad” on page 73 • “1040 Wireless WAN card” on page 75 • “1050 Docking-station-connector bracket” on page 76 • “1060 Thermal fan assembly” on page 76 • “1070 USB-card cable and USB card” on page 77 • “1080 Built-in battery” on page 79 • “1090 Coin-cell battery” on page 81 • “1100 Trackpad cable” on page 81 • “1110 Trackpad” on page 82 • “1120 NFC card” on page 84 • “1130 Speaker assembly” on page 85 • “1140 Fingerprint-reader-and-smart-card-reader cable, fingerprint-reader cable, and smart-card-reader cable (for ThinkPad T490s only)” on page 87 • “1150 Fingerprint-reader bracket and fingerprint reader” on page 88 • “1160 Smart card reader or dummy smart card reader” on page 89 • “1170 System board” on page 91 • “1180 Power-card cable and power card” on page 95 • “1190 LCD unit” on page 96	For access, remove these FRUs in order: • “1010 Keyboard (for ThinkPad X390 only)” on page 70 • “1020 Base cover assembly” on page 72 • “1030 M.2 solid-state drive, bracket, and thermal pad” on page 73 • “1040 Wireless WAN card” on page 75 • “1050 Docking-station-connector bracket” on page 76 • “1060 Thermal fan assembly” on page 76 • “1070 USB-card cable and USB card” on page 77 • “1080 Built-in battery” on page 79 • “1090 Coin-cell battery” on page 81 • “1100 Trackpad cable” on page 81 • “1110 Trackpad” on page 82 • “1120 NFC card” on page 84 • “1130 Speaker assembly” on page 85 • “1140 Fingerprint-reader-and-smart-card-reader cable, fingerprint-reader cable, and smart-card-reader cable (for ThinkPad T490s only)” on page 87 • “1150 Fingerprint-reader bracket and fingerprint reader” on page 88 • “1160 Smart card reader or dummy smart card reader” on page 89 • “1170 System board” on page 91 • “1180 Power-card cable and power card” on page 95 • “1190 LCD unit” on page 96

2010 LCD bezel cover and LCD bezel

For access, remove these FRUs in order:
- “1020 Base cover assembly” on page 72
- “1190 LCD unit” on page 96

Removal steps

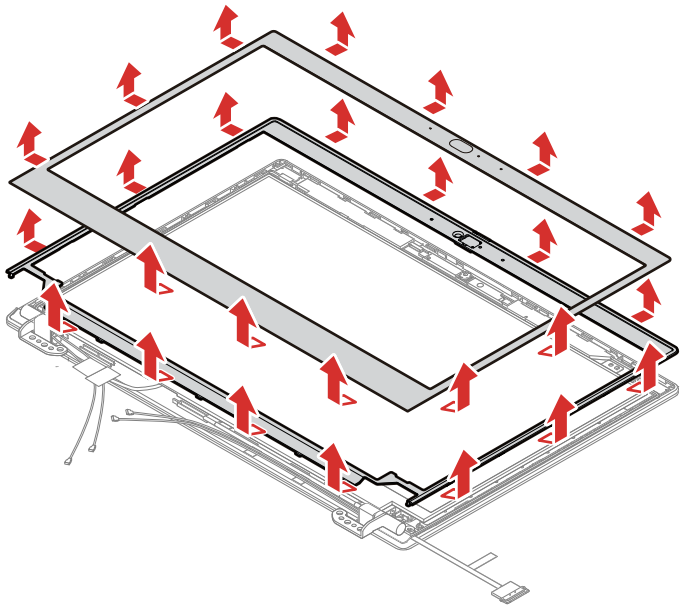

When installing: Ensure that all the latches are attached firmly.

2020 LCD hinges

For access, remove these FRUs in order:

- “1020 Base cover assembly” on page 72
- “1190 LCD unit” on page 96
- “2010 LCD bezel cover and LCD bezel” on page 98

Removal steps

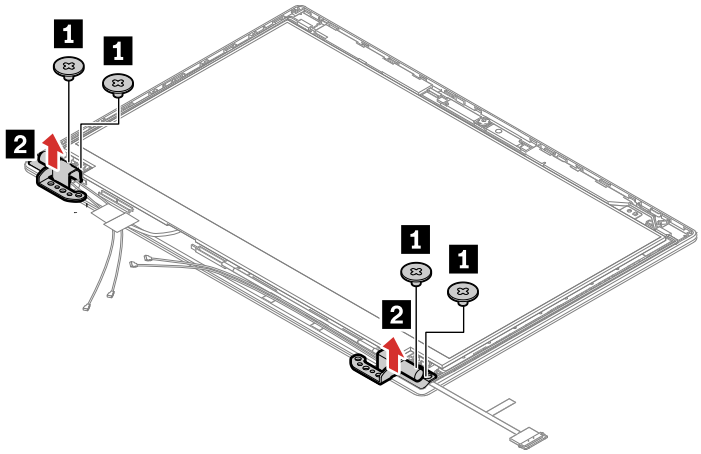

Table 17. Screw specification for ThinkPad T490s

Step	Screw (quantity)	Color	Torque
1	M2.5 × 2.3 mm, flat-head, nylon-coated (4)	Black	0.294 Nm (3.0 kgf-cm)

Table 18. Screw specification for ThinkPad X390

Step	Screw (quantity)	Color	Torque
1	M2.5 × 2.5 mm, flat-head, nylon-coated (4)	Black	0.294 Nm (3.0 kgf-cm)

2030 LCD panel and LCD cable

For access, remove these FRUs in order:
- “1020 Base cover assembly” on page 72
- “1190 LCD unit” on page 96
- “2010 LCD bezel cover and LCD bezel” on page 98
- “2020 LCD hinges” on page 99

Removal steps

Attention: If the LCD panel is fixed to the LCD cover assembly by tapes, remove the LCD panel carefully. Inappropriate handling might cause damage to the LCD panel.

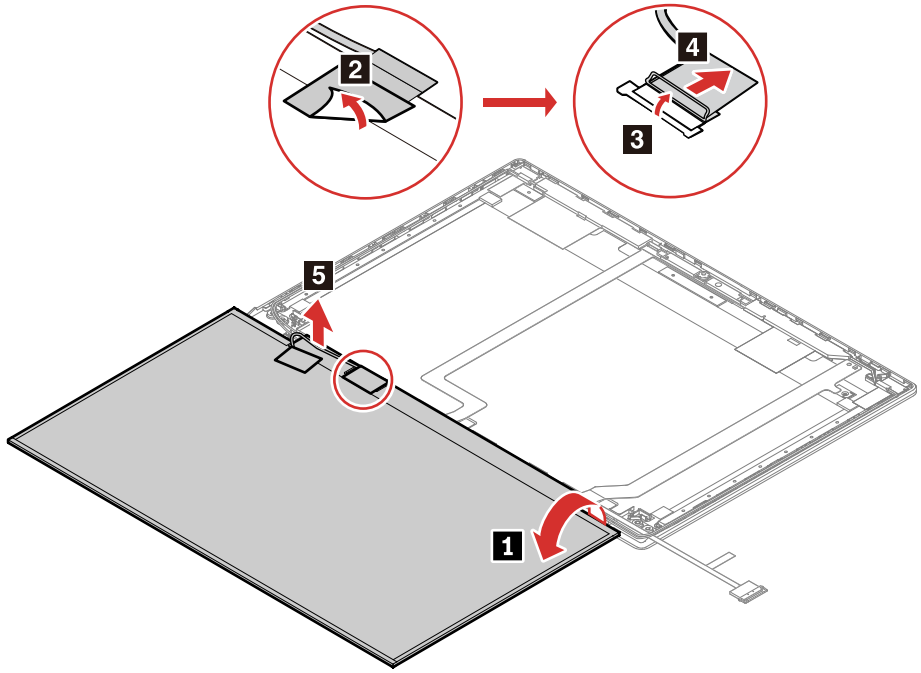

When installing: Ensure that the connector is attached firmly.

2040 Camera and microphone module and aluminum foil (for ThinkPad T490s only)

For access, remove these FRUs in order:
- “1020 Base cover assembly” on page 72
- “1190 LCD unit” on page 96
- “2010 LCD bezel cover and LCD bezel” on page 98
- “2020 LCD hinges” on page 99
- “2030 LCD panel and LCD cable” on page 100

Note: Depending on the type of the camera-and-microphone-module cable, the disconnection steps of the cable might be different from the following illustrations. For more information, see “2050 Camera-and-microphone-module cable and antenna kit” on page 101.

Removal steps of the camera and microphone module and aluminum foil (for ThinkPad T490s only)

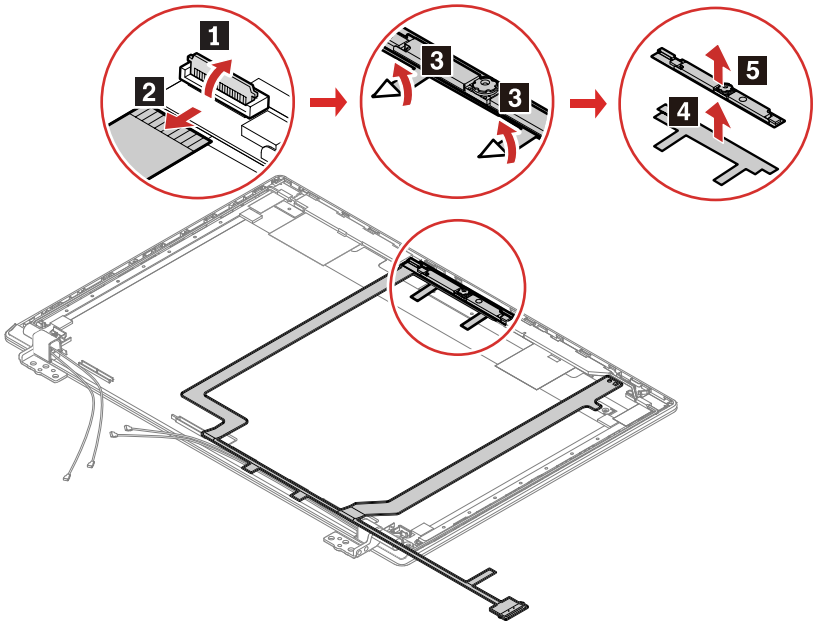

Removal steps of the camera and microphone module

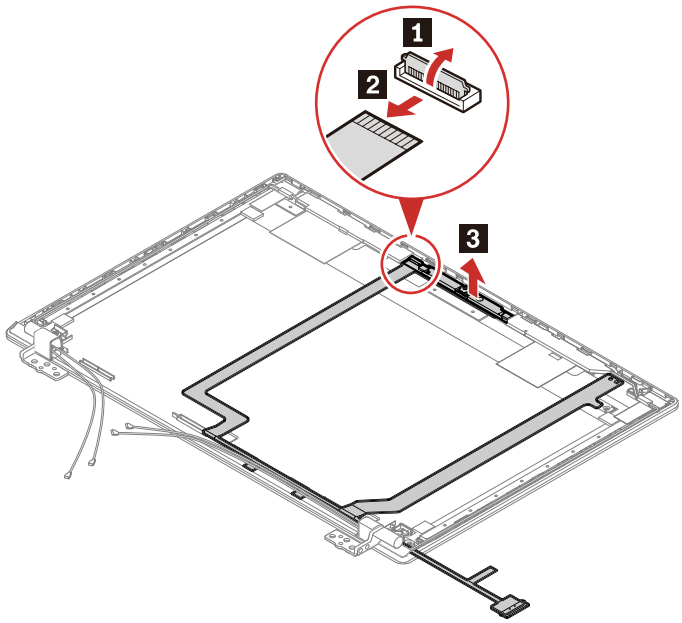

2050 Camera-and-microphone-module cable and antenna kit

For access, remove these FRUs in order:

- “1020 Base cover assembly” on page 72
- “1190 LCD unit” on page 96
- “2010 LCD bezel cover and LCD bezel” on page 98
- “2020 LCD hinges” on page 99

- “2030 LCD panel and LCD cable” on page 100

Camera-and-microphone-module cable types

Depending on the computer model, the camera-and-microphone-module cable might be one of the following types.

ThinkPad T490s

For models with IR camera, microphone, and system status indicator

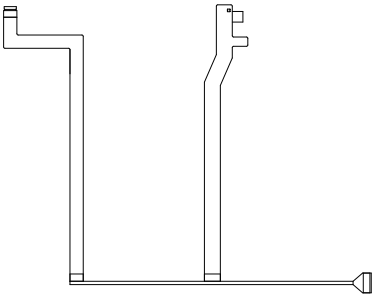

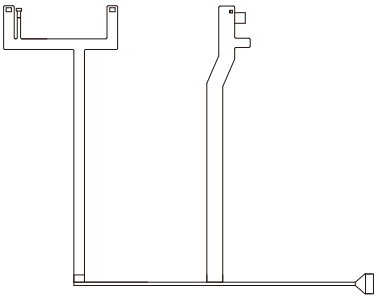

For models with conventional camera, microphone, and system status indicator

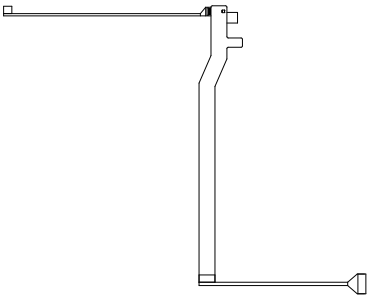

For models with system status indicator only

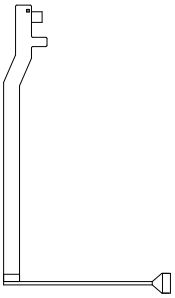

ThinkPad X390

For models with IR camera, microphone, and system status indicator

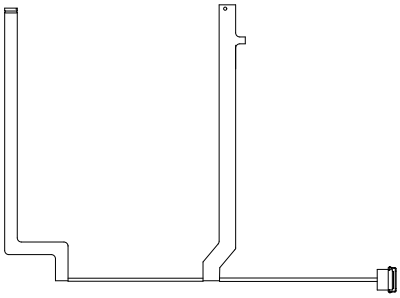

For models with conventional camera, microphone, and system status indicator

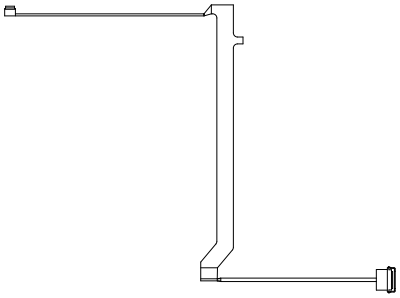

For models with microphone and system status indicator

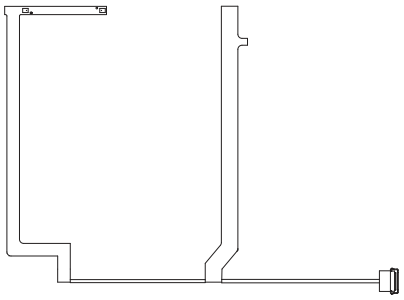

For models with system status indicator only

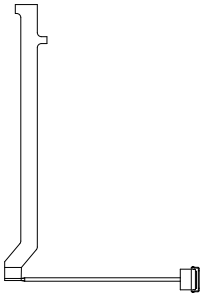

Removal steps of the camera-and-microphone-module cable

Note: Depending on the type of the camera-and-microphone-module cable, the disconnection steps of the cable might be different from the following illustration. For models without camera, skip the disconnection steps of the cable.

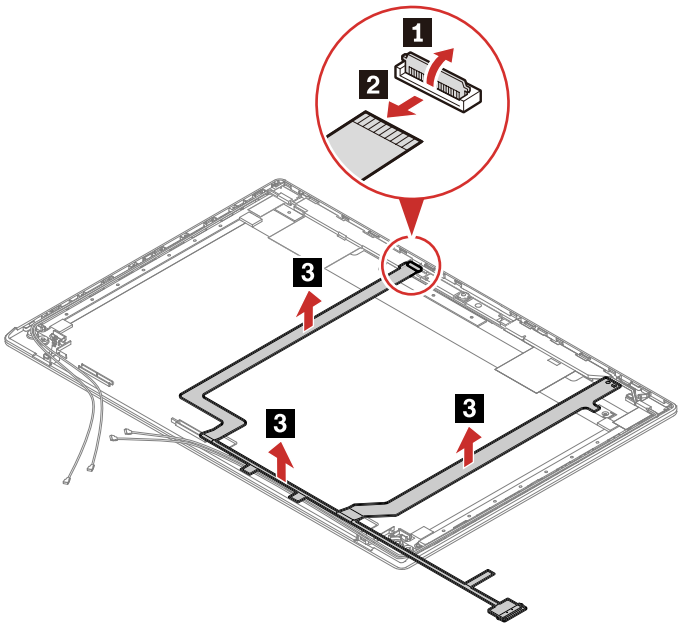

Removal steps of the antenna kit

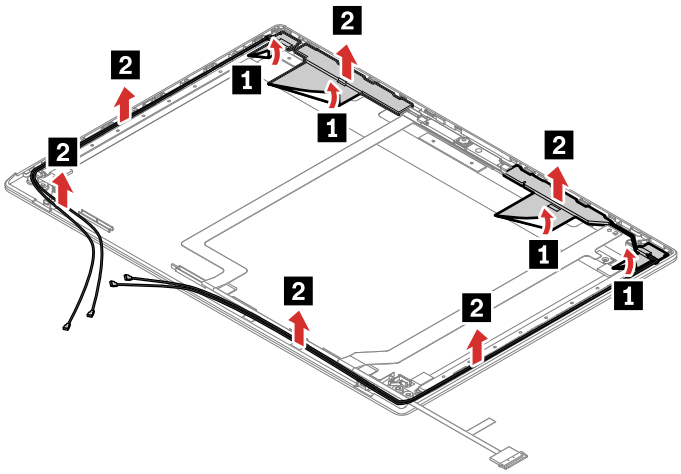

Attention: When you route the cables, ensure that they are not subject to any tension. Tension could cause the cables to be damaged by the cable guides, or a wire to be broken.

Antenna locations

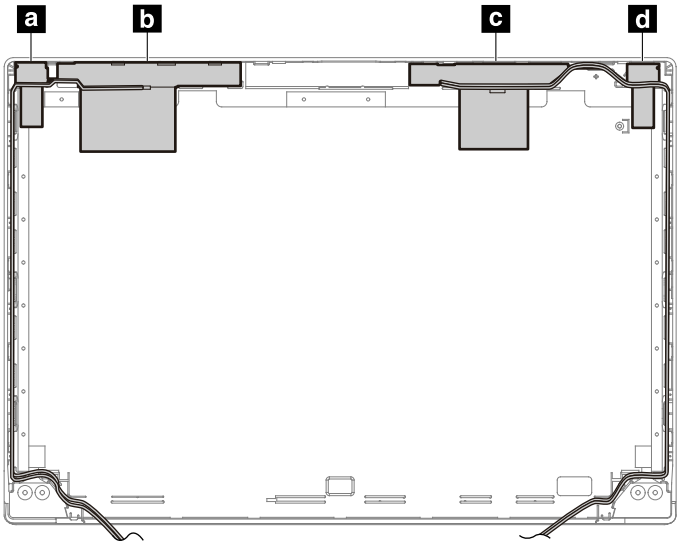

a Wireless LAN main antenna (gray)
b Wireless WAN main antenna (orange, for selected models)
c Wireless WAN auxiliary antenna (blue, for selected models)
d Wireless LAN auxiliary antenna (black)

2060 LCD cover assembly

For access, remove these FRUs in order:

- “1020 Base cover assembly” on page 72
- “1190 LCD unit” on page 96
- “2010 LCD bezel cover and LCD bezel” on page 98
- “2020 LCD hinges” on page 99
- “2030 LCD panel and LCD cable” on page 100
- “2040 Camera and microphone module and aluminum foil (for ThinkPad T490s only)” on page 100
- “2050 Camera-and-microphone-module cable and antenna kit” on page 101

Appendix A. Notices

Lenovo may not offer the products, services, or features discussed in this document in all countries. Consult your local Lenovo representative for information on the products and services currently available in your area. Any reference to a Lenovo product, program, or service is not intended to state or imply that only that Lenovo product, program, or service may be used. Any functionally equivalent product, program, or service that does not infringe any Lenovo intellectual property right may be used instead. However, it is the user's responsibility to evaluate and verify the operation of any other product, program, or service.

Lenovo may have patents or pending patent applications covering subject matter described in this document. The furnishing of this document does not give you any license to these patents. You can send license inquiries, in writing, to:

Lenovo (United States), Inc.
1009 Think Place - Building One
Morrisville, NC 27560
U.S.A.
Attention: Lenovo Director of Licensing

LENOVO PROVIDES THIS PUBLICATION "AS IS" WITHOUT WARRANTY OF ANY KIND, EITHER EXPRESS OR IMPLIED, INCLUDING, BUT NOT LIMITED TO, THE IMPLIED WARRANTIES OF NON-INFRINGEMENT, MERCHANTABILITY OR FITNESS FOR A PARTICULAR PURPOSE. Some jurisdictions do not allow disclaimer of express or implied warranties in certain transactions, therefore, this statement may not apply to you.

This information could include technical inaccuracies or typographical errors. Changes are periodically made to the information herein; these changes will be incorporated in new editions of the publication. Lenovo may make improvements and/or changes in the product(s) and/or the program(s) described in this publication at any time without notice.

The products described in this document are not intended for use in implantation or other life support applications where malfunction may result in injury or death to persons. The information contained in this document does not affect or change Lenovo product specifications or warranties. Nothing in this document shall operate as an express or implied license or indemnity under the intellectual property rights of Lenovo or third parties. All information contained in this document was obtained in specific environments and is presented as an illustration. The result obtained in other operating environments may vary.

Lenovo may use or distribute any of the information you supply in any way it believes appropriate without incurring any obligation to you.

Any references in this publication to non-Lenovo Web sites are provided for convenience only and do not in any manner serve as an endorsement of those Web sites. The materials at those Web sites are not part of the materials for this Lenovo product, and use of those Web sites is at your own risk.

Any performance data contained herein was determined in a controlled environment. Therefore, the result obtained in other operating environments may vary significantly. Some measurements may have been made on development-level systems and there is no guarantee that these measurements will be the same on generally available systems. Furthermore, some measurements may have been estimated through extrapolation. Actual results may vary. Users of this document should verify the applicable data for their specific environment.

© Copyright Lenovo 2020

Electromagnetic emission notices

For electromagnetic emission information on Class B digital devices, refer to the corresponding information in the *User Guide*.

CE

EU Contact: Lenovo (Slovakia), Landererova 12, 811 09 Bratislava, Slovakia

Trademarks

LENOVO, LENOVO logo, THINKPAD, THINKPAD logo, and TRACKPOINT are trademarks of Lenovo. Intel Optane and Thunderbolt are trademarks of Intel Corporation or its subsidiaries in the U.S. and/or other countries. Microsoft and Windows are trademarks of the Microsoft group of companies. The terms HDMI and HDMI High-Definition Multimedia Interface are trademarks or registered trademarks of HDMI Licensing LLC in the United States and other countries. USB-C is a trademark of USB Implementers Forum. All other trademarks are the property of their respective owners. © 2019 Lenovo.

Appendix B. Abbreviation table

The following table lists all abbreviations used in this manual.

Abbreviation	Term
BGA	Ball Grid Array
CMOS	Complementary Metal Oxide Semiconductor
CMV	Custom Model Variant
CRC	Cyclic redundancy check
CRT	Cathode ray tube
CRU	Customer Replaceable Unit
CTO	Configure To Order
EAIA	Enhanced Asset Information Area
EEPROM	Electrically Erasable Programmable Read-Only Memory
EFI	Extensible Firmware Interface
ESD	Electrostatic discharge
FRU	Field Replaceable Unit
GAV	General Announce Variant
IC	Integrated circuits
LCD	Liquid Crystal Display
MTM	Machine type and model
POST	Power-on self-test
RFID	Radio-frequency identification
SVP	Supervisor password
UUID	Universally unique identifier

© Copyright Lenovo 2020

Lenovo

Part Number: SP40T09974_01

Printed in China

(1P) P/N: SP40T09974_01