4404.029.05911
Last update: 16/07/16

PHILIPS

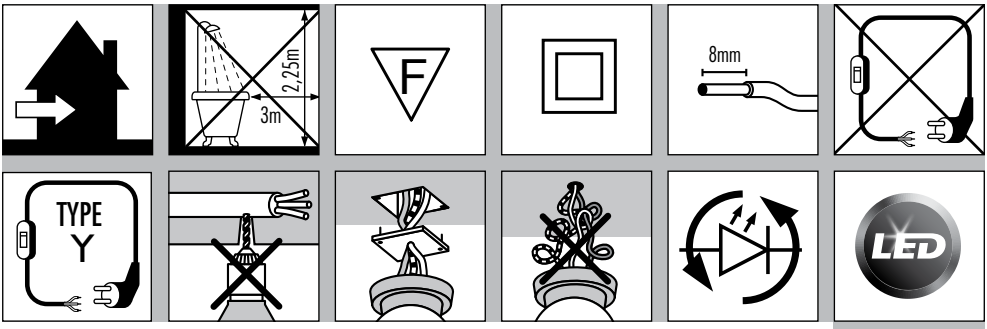

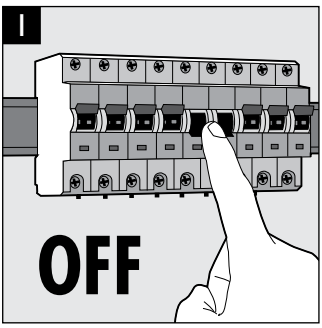

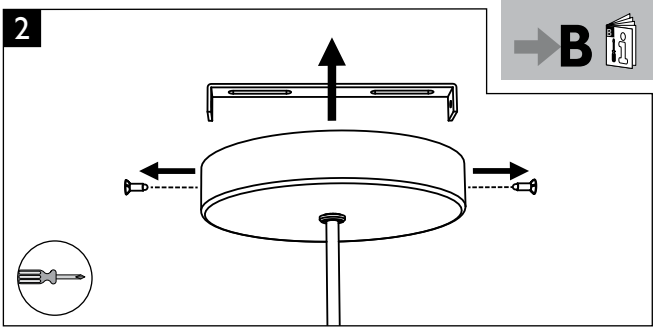

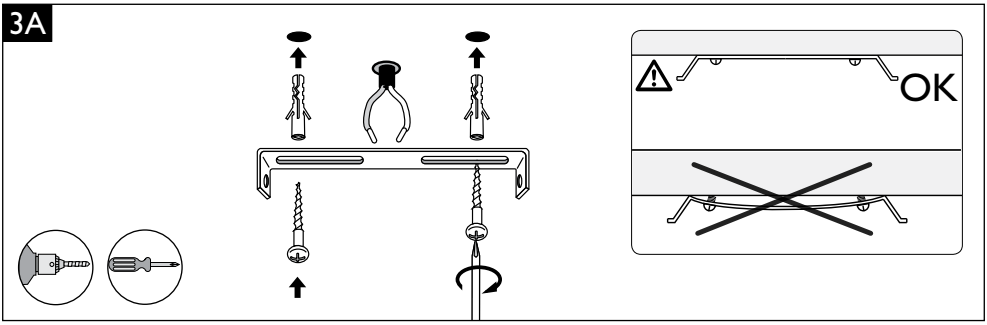

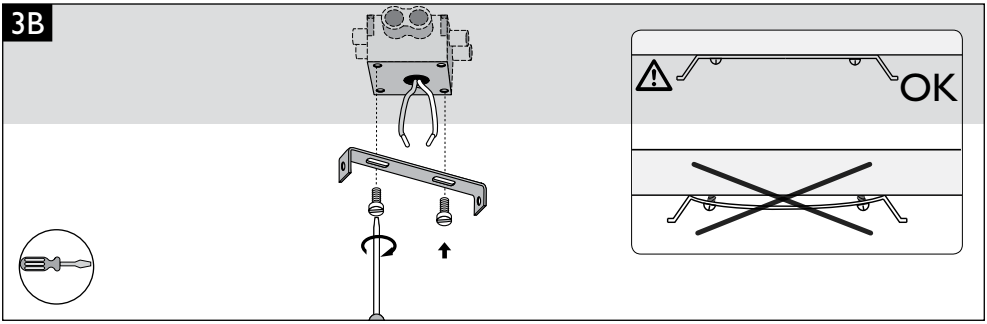

© Copyright

PHILIPS

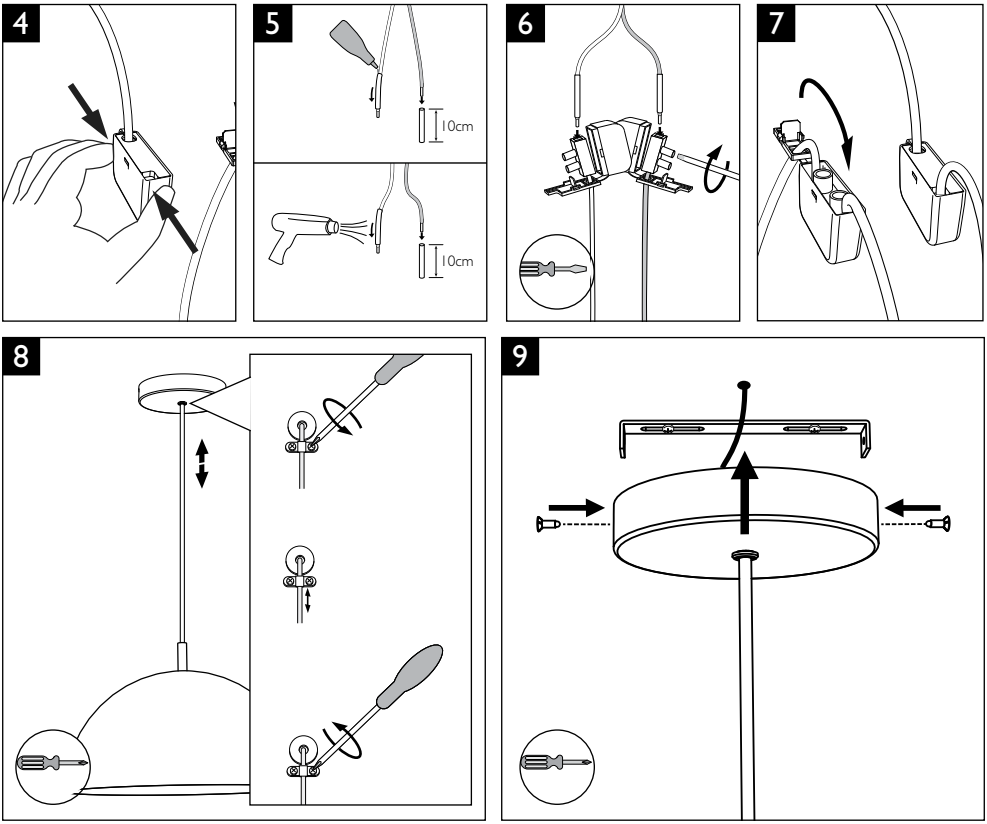

PHILIPS LIGHTING (CHINA) INVESTMENT CO., LTD.
BUILDING NO. 9, LANE 888, TIANLIN ROAD,
MINHANG DISTRICT, SHANGHAI, CHINA, 200233
飞利浦照明（中国）投资有限公司
中国上海市闵行区田林路888弄9号楼，邮编：200233