AKZM 8420 WH

12NC: 852584201110

GTIN (EAN) code: 8003437832963

SENSING THE DIFFERENCE



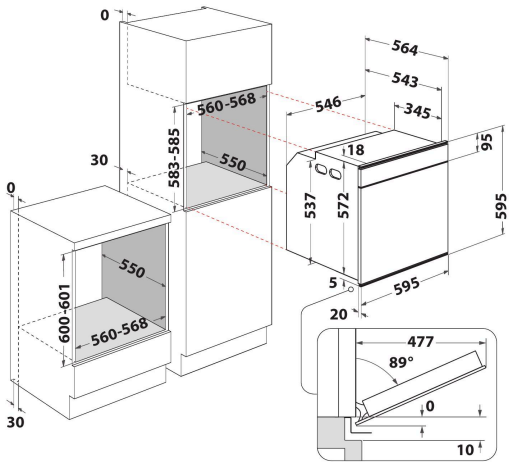

- 6TH Sense technology
- SmartClean
- Energy class A+
- Cavity 73 L
- Cook3
- Ready2Cook
- Forced Air Fan Cooking
- Turbo Fan
- Grill
- Easy Clean Enamel Interior
- Turbo grill function
- Maxi cooking
- Pastry function
- Soft closing door
- Special functions
- Fast Pre-Heating
- Conventional Cooking

Whirlpool built in electric oven: white color, self cleaning - AKZM 8420 WH

This Whirlpool built in Oven features: starClean technology, providing an eco-friendly self cleaning cycle that ensures ideal cleaning results in just 35 minutes, at the touch of a button. Advanced electric technology allowing you to cook dishes saving energy. Halogen lamp allowing a more energy-efficient performance. Exclusive 6th SENSE technology, that allows you to pick among a variety of pre-programmed recipes, and your oven will automatically adjust cooking, temperature and time settings, to ensure perfect results. Innovative Cook3 function, that allows you to cook up to three separate dishes at the same time, without the risk of aromas mixing.

6th Sense Absolute
Three steps recipes. Always reach outstanding results. Thanks to the central knob, you can set your oven in three simple steps. Select one of the 6 pre-set recipes and your oven will automatically set the dedicated cooking function and propose the appropriate time and temperature range.

Ready2cook
No pre-heating required. The Ready2Cook function uses a powerful convection system to quickly reach the right temperature, and completely eliminate the need for pre-heating.

Cook3
No aroma mixing. With the innovative Cook3 function, you can cook up to three separate dishes at the same time, without the risk of aromas mixing.

Soft closing
Slow-motion closing. Thanks to slow-closing hinges, the oven door shuts effortlessly, with a soft and silent motion.

Absolute aesthetic
The Absolute collection. Admire the beauty of performance. With a futuristic design and unparalleled performance, the Absolute collection is designed for modern, high-tech kitchens. Equipped with innovative 6TH SENSE technology, Absolute ovens can be set in three simple steps for perfect results. Maximum flexibility and ease of use with a distinctive look and original finishes.

Electronic control
Electronic temperature control.

AKZM 8420 WH

12NC: 852584201110

GTIN (EAN) code: 8003437832963

Whirlpool
SENSING THE DIFFERENCE

MAIN FEATURES

Product group	Oven
Commercial code	AKZM 8420 WH
Main colour of product	White
Construction type	Built-in
Type of control	Electronic
Type of control settings	-
Are any hobs controls integrated?	No
Which kind of hobs can be controlled?	-
Automatic programmes	Yes
Current (A)	16
Voltage (V)	220-240
Frequency (Hz)	50/60
Length of Electrical Supply Cord (cm)	90
Plug type	No
Depth with open door 90 degree (mm)	-
Height of the product	595
Width of the product	595
Depth of the product	564
Minimum niche height	0
Minimum niche width	0
Niche depth	0
Net weight (kg)	35.5
Usable volume (of cavity)	73
Integrated Cleaning system	Hydrolytic
Grids of the cavity	1
Trays	2

TECHNICAL FEATURES

Timer	-
Time control	Electronic
Time-setting options	Start and Stop
Safety device	-
Interior light	Yes
Number of interior lights of the cavity	1
Position of interior lights of the cavity	Rear
Oven guides of the cavity	Telescopic
Probe of the cavity	No

PERFORMANCES

Energy input	Electric
Type of energy of the cavity	Electricity
Energy efficiency class - NEW (2010/30/EU)	A+
Energy consumption per cycle conventional - NEW (2010/30/EU)	0.91
Energy consumption per cycle forced air convection - NEW (2010/30/EU)	0.7

