AKP 7460 IX

12NC: 857774601700

GTIN (EAN) code: 8003437937767



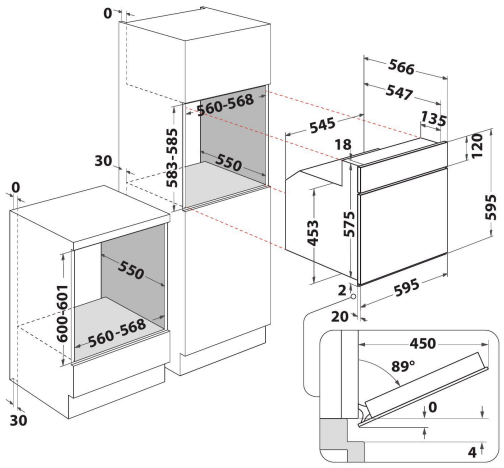

- Catalytic cleaning system
- Energy class A
- Cavity 65 L
- Defrost function
- Forced Air Fan Cooking
- Grill
- Easy Clean Enamel Interior
- Turbo grill function
- Pastry function
- Soft closing door
- Conventional Cooking
- "Push Push" knobs
- Door Glasses Number: 2
- Protuding handle
- Timer
- Grill 1400 W
- 1 Grid

Whirlpool built in electric oven: inox color - AKP 7460 IX

This Whirlpool built in Oven features: advanced electric technology allowing you to cook dishes saving energy. Halogen lamp allowing a more energy-efficient performance. Oven door with soft-close design, for increased ease of use.

Multifunction 8
Multiple cooking methods. The Multifunction 8 feature offers flexible cooking options, to ensure perfect results, whatever the recipe.

Soft closing
Slow-motion closing. Thanks to slow-closing hinges, the oven door shuts effortlessly, with a soft and silent motion.

Absolute aesthetic
The Absolute collection. Admire the beauty of performance. With a futuristic design and unparalleled performance, the Absolute collection is designed for modern, high-tech kitchens. Equipped with innovative 6TH SENSE technology, Absolute ovens can be set in three simple steps for perfect results. Maximum flexibility and ease of use with a distinctive look and original finishes.

Sliding shelves
Smooth motion. This Whirlpool oven features soft-sliding shelves, for increased ease of use.

Catalytic
Self-cleaning panels. The catalytic panels fitted inside the oven take care of any spills and splashes, eliminating them while cooking.

Standard cavity
This Whirlpool Oven features a standard-size cavity.

Energy class
Outstanding energy savings. Ovens with an A/ A+ energy rating offer an excellent level of energy efficiency, ensuring lower consumption and saving you money on your energy bills.

Push push
The knobs' 'push push' design ensure extra comfortable ease of use and a premium look.

Energy class A
Energy efficient. With its A energy rating, this Whirlpool appliance will allow you to enjoy both ideal performance and excellent energy consumption.

AKP 7460 IX

12NC: 857774601700

GTIN (EAN) code: 8003437937767

Whirlpool
SENSING THE DIFFERENCE

MAIN FEATURES

Product group	Oven
Commercial code	AKP 7460 IX
Main colour of product	Inox
Construction type	Built-in
Type of control	Mechanical and electronic
Type of control settings	-
Are any hobs controls integrated?	No
Which kind of hobs can be controlled?	-
Automatic programmes	No
Current (A)	16
Voltage (V)	220-240
Frequency (Hz)	50/60
Length of Electrical Supply Cord (cm)	90
Plug type	No
Depth with open door 90 degree (mm)	-
Height of the product	595
Width of the product	595
Depth of the product	564
Minimum niche height	0
Minimum niche width	0
Niche depth	0
Net weight (kg)	31.95
Usable volume (of cavity)	60
Integrated Cleaning system	Catalytic partial
Grids of the cavity	1
Trays	2

TECHNICAL FEATURES

Timer	-
Time control	Electronic
Time-setting options	No delay options
Safety device	-
Interior light	Yes
Number of interior lights of the cavity	1
Position of interior lights of the cavity	Rear
Oven guides of the cavity	Telescopic
Probe of the cavity	No

PERFORMANCES

Energy input	Electric
Type of energy of the cavity	Electricity
Energy efficiency class - NEW (2010/30/EU)	A
Energy consumption per cycle conventional - NEW (2010/30/EU)	0.87
Energy consumption per cycle forced air convection - NEW (2010/30/EU)	0.78

