

LogiLink®

Universal Flexible Projector/Laptop Trolley

Art. No.: **BP0067**

Best Connectivity

Designed to mount the computer under the desk to save more space in the working area.

Features:

» Steel construction provides a solid, and long-lasting performance
» Increased storage room beneath the desktop
» Both shelves can be tilted 35° up and down to optimize your typing angle
» Height adjustable from 700-1100mm
» 4 casters offer maximum stability (2 lockable)
» Raised edge keeps your device from sliding off
» Non-Skid Foam Pads: protect work surface from scratches or scuffs
» Durable product with maximum capacity of 10kg
» Ideal for conference center, hotel, meeting room, classroom and showroom



Height adjustable



Solid casters with brakes



Both shelves can be tilted



Non-skid foam pad

RoHS compliant

* The specifications and pictures are subject to change without notice.
*All trade names referenced are the registered namework of their respective owners.

BP0067
4 052792 050653
Made in China



LogiLink®

Universal Flexible Projector/Laptop Trolley

Art. No.: **BP0067**

Best connectivity

Specification:

Material	MDF & Melamine
Color	White
Dimensions	705 x 538 x 700-1100mm
Worksurface Size (LxW)	300 x 350mm, 400 x 350mm
Tabletop Thickness	15mm
Height Range	700-1100m
Worksurface Weight Capacity	10kg

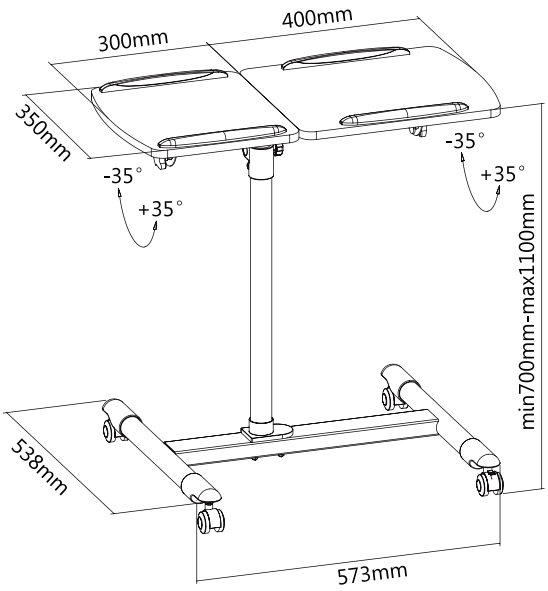

Package Contents:

» 1 x Laptop Trolley
» 1 x Screw Pack
» 1 x User Manual

Package Informations:

» Packing Dimension: mm
» Packing Weight: kg
» Carton Dimension: mm
» Carton Q'ty: pcs
» Carton Weight: kg

RoHS compliant

* The specifications and pictures are subject to change without notice.
*All trade names referenced are the registered namework of their respective owners.

BP0067
4 052792 050653
Made in China