ZD620 Thermal Transfer (203 & 300 DPI)

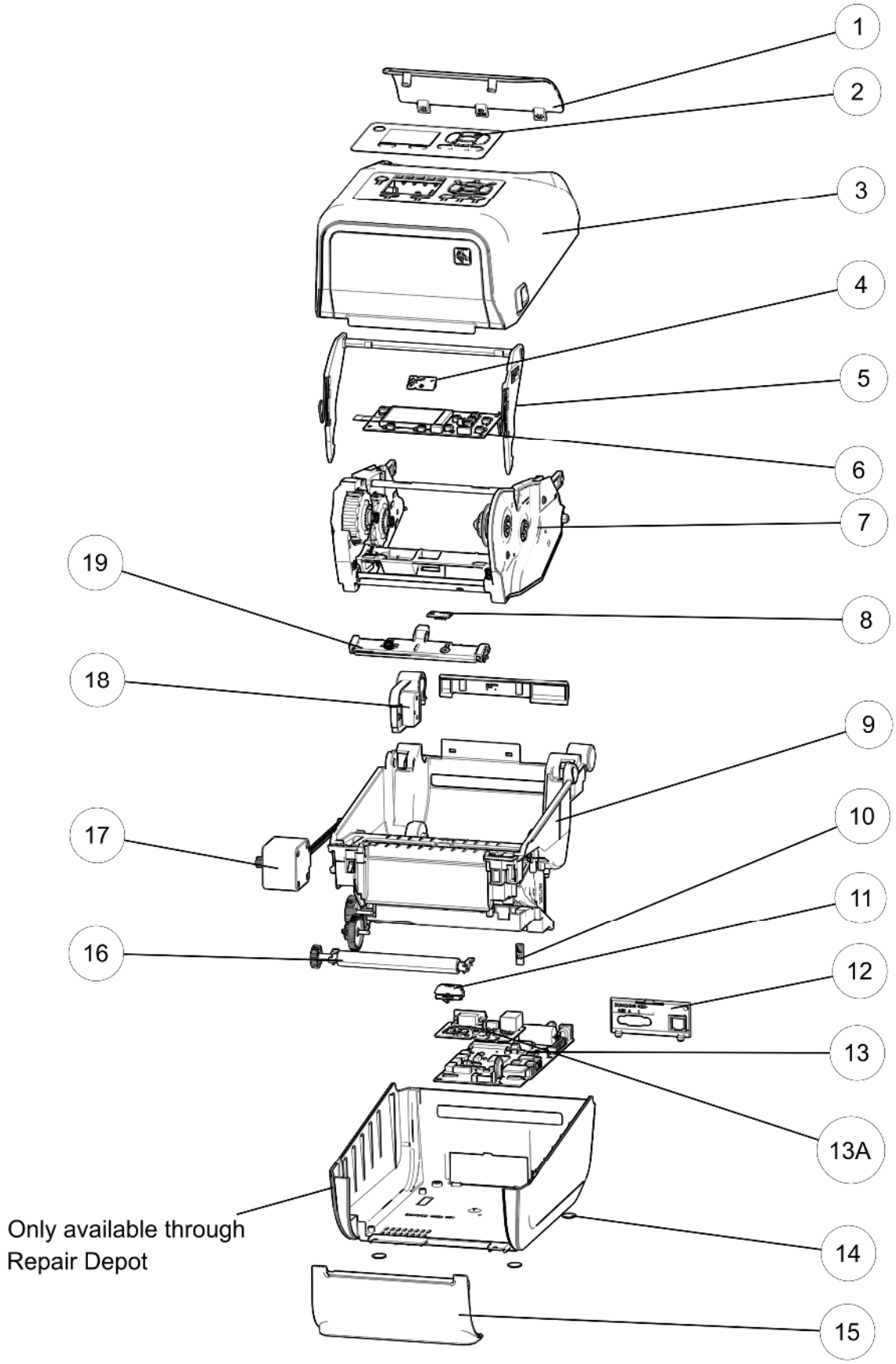

ZD620 Thermal Transfer (203 & 300 DPI)

Item	Description	Part Number
1	Media Window	P1080383-200
2	Nameplate without LCD (contains nameplates with and without the Print Touch icon) Nameplate with LCD (contains nameplates with and without the Print Touch icon)	P1080383-236 P1080383-237
3	Cover Assembly for Standard Models with LCD (includes Media Window) Cover Assembly for Standard Models without LCD (includes Media Window) Cover Assembly for Healthcare Models (includes Media Window)	P1080383-239 P1080383-238 P1080383-240
4	Ribbon Out Sensor	P1080383-014
5	Latch Assembly	P1080383-207
6	Control Panel PCBA without LCD Control Panel PCBA with LCD	P1080383-208 P1080383-241
7	Ribbon Carriage	P1080383-209
8	Upper Media Sensor (Gap Sensor Moveable)	P1080383-210
9	Print Mechanism 203dpi Print Mechanism 300dpi	P1080383-242 P1080383-243
10	Cover Open Sensor	P1080383-011
11	Lower Media Sensor (Blackline Sensor)	P1080383-012
12	Rear Bezel: Serial & Ethernet	P1080383-244
13	Main Logic Board, USB, USB Host, Bluetooth, Modular Connectivity Slot Main Logic Board, USB, USB Host, Bluetooth, WiFi 802.11ac, Modular Connectivity Slot	P1080383-254 P1080383-253
13A	Ethernet & Serial Module (used to replace a failed module)	P1080383-247
14	Rubber Feet (set of 4)	P1080383-021
15	Front Bezel, Standard	P1080383-019
16	Platen Roller 203dpi Platen Roller 300dpi Bearings for the platen roller, Left & Right (10 each)	P1080383-222 P1080383-223 P1080383-224
17	Motor Assy 203dpi and 300dpi	P1080383-221
18	Covers for Hinge (includes side and rear hinge covers)	P1080383-225
19	Printhead, 203dpi Printhead, 300dpi	P1080383-226 P1080383-227
Not Shown	Cutter, 4", Full Cut	P1080383-228
	Dispenser, Front Bezel	P1080383-018
	Media Core Adaptors, For 1.5", 2" & 3" diameter cores	P1080383-022
	Convert to 300dpi	P1080383-229
	Convert to 203dpi	P1080383-230
	Ribbon Core Adapters used to accept 1 inch diameter ribbon cores (1 set)	P1080383-231
	Base Housing for Battery (When upgrading to battery power functionality, also order the P1080383-603 battery)	P1080383-600
	Battery for Desktop Printers (When upgrading to battery power functionality, also order the P1080383-600 battery housing)	P1080383-603
	Adapter bracket enables mounting a ZD620T in the same location as an existing GX420t/GX430t model is currently mounted. Allows usage of GX420t/GX430t mounting holes to mount a ZD620T.	P1080383-037
	Shipping Pack - Packakging for shipping the printer	P1080383-232
	Power Supply Unattached, 75W, C13, with US & Euro Cords for Standard Models	P1079903-026
	Power Supply Unattached, 75W, 24V with US Cord, for Healthcare Models	P1079903-030
	Power Supply Attached, 75W (power cord not included)	P1080383-234
	Power Cord, U.S. 120V IEC320C13 (set of 5)	105950-014
	Power Cord, Euro 220V IEC320C13 (set of 5)	105950-015
	Power Cord, U.K. 240V IEC320C13 (set of 5)	105950-030
	Power Cord, Australia 240V IEC320C13 (set of 5)	105950-029
	Power Cord,China 220V C13 (set of 5)	105950-078
	Power Cord, Japan 125V JAPAN C13 (set of 5)	105950-079
	Power Cord, 220V Argentina C13 (set of 5)	105950-080
	Power Cord,10A NBR 14136, Brazil (set of 5)	P1033401
	Power Cord, C13, 10A, IEC Israel (set of 5)	P1061022-020
	Power Cord India, 10A, IS 1293, C13 (set of 5)	P1080829
	Power Cord, Taiwan, 125V, IEC320C13 (set of 5)	P1079903-035