LG
Life's Good

OWNER'S MANUAL

LG Digital Signage

(MONITOR SIGNAGE)

Please read this manual carefully before operating your set and retain it for future reference.

55EG5CE

www.lg.com

Copyright © 2018 LG Electronics Inc. All Rights Reserved.

ENGLISH

TABLE OF CONTENTS

IMPORTANT PRECAUTIONS.....3

- Electrical Power Related Precautions.....3
- Precautions for installing the Product.....4
- Precautions for Moving the Product.....6
- Precautions for Using/Cleaning the Product.....6
- Product Disposal (Only, Hg lamp used LCD Monitor).....7

LICENSES.....8

ASSEMBLY AND PREPARATION ..9

- Installing on the ceiling.....11
- External Equipment Setup.....12

REMOTE CONTROL 13

MAKING CONNECTIONS..... 15

- Connecting to a PC.....15
- External Device Connection.....15
- Using the Input List.....17

TROUBLESHOOTING..... 18

PRODUCT SPECIFICATIONS..... 20

WARNING - This equipment is compliant with Class A of CISPR 32. In a residential environment this equipment may cause radio interference.

IMPORTANT PRECAUTIONS

Please read these safety precautions carefully before using the product.

⚠ WARNING

Failure to follow those warnings may result in death, serious injury or damage to the product or other property.

⚠ CAUTION

If you ignore the caution message, you may be slightly injured or the product may be damaged.

⚠ WARNING

- Indoor Use Only.

Electrical Power Related Precautions

⚠ WARNING

- Use only the power cord supplied with the unit or another manufacturer's authorized cord.
  - Failure to do so may result in fire or electrical shock or damage to the product.
- Use only a properly grounded plug and receptacle.
  - If you do not you may be electrocuted or injured. Or the product might be damaged.
- Do not use a damaged or loose plug.
  - This may cause electrical shock or fire.
- Operate the display only from a power source(i.e. voltage) indicated in the product specification.
  - Otherwise the product can be damaged, fire can occur or you may be electrocuted. If you are not sure what type of power supply you have, consult a certified electrician.
- In the presence of thunder and lightning, never touch the power cord and signal cable because it can be very dangerous.
  - It can cause electric shock.
- Do not connect several extension cords, electrical appliances or electrical heaters to a single outlet. Use a power strip with a grounding terminal designed for exclusive use with the computer.
  - A fire can break out due to overheating.

- Do not touch the power plug with wet hands. Additionally, if the cord pin is wet or covered with dust, dry the power plug completely or wipe dust off before plugging in the cord.
  - You may be electrocuted due to excess moisture.
- If you don't intend to use the product for a long time, unplug the power cable from the product.
  - Layers of dust can cause a fire, or insulation deterioration can cause electric leakage, electric shock or fire.
- Insert the power plug firm so it cannot come loose.
  - A loose connection can cause fire.
- Hold the plug when pulling out the power cable. Do not pull the plug out by the wire. Do not bend the power cord with excessive force or put heavy objects on the power cord.
  - The power line can be damaged, which may cause electric shock or fire.
- Do not insert metal or other conductive materials into the product openings. Additionally, do not touch the power cable right after plugging into the wall input terminal.
  - You may be electrocuted.
- Use an appliance coupler as a disconnect device.
- Please make sure the device is installed near the wall outlet to which it is connected and that the outlet is easily accessible.
- Do not unplug the power cord while the product is in use.
  - Electrical shock can damage the product.
- As long as this unit is connected to the AC wall outlet, it is not disconnected from the AC power source even if the unit is turned off.

Precautions for installing the Product

⚠ WARNING

- Keep away from heat sources like heaters or open flames.
  - Electrical shock, fire, malfunction or deformation may occur.
- Keep the packing anti-moisture material or vinyl packing out of the reach of children.
  - Anti-moisture material is harmful if swallowed. If swallowed by mistake, force the patient to vomit and visit the nearest hospital. Additionally, vinyl packing can cause suffocation. Keep it out of the reach of children.
- Do not put heavy objects on the product or sit upon it.
  - If the product collapses or is dropped, you may be injured. Prevent Children from climbing or pulling on the unit.
- Do not leave the power or signal cable where someone can trip over it.
  - Pedestrians may become entangled in the cables and cause the device to become damaged causing electrical shock, fire, or serious injury.

- Install the product in a neat and dry place. Do not use near water.
  - Dust or moisture can cause electrical shock, fire or product damage.
- Do not add accessories that have not been designed for this display.
- If you smell smoke or other odors or hear a strange sound from the product unplug the power cord and contact LG Customer Service.
  - If you continue to use without taking proper measures, electrical shock or fire can occur.
- If you dropped the product or the case is broken, turn off the product and unplug the power cord.
  - If you continue to use without taking proper measures, electrical shock or fire can occur. Contact LG Customer Service.
- Do not drop an object on or apply impact to the product. Do not throw any toys or objects at the product.
  - It can cause injury to humans, problems to the product and damage the display.
- Keep out of reach of children and do not place toys near the product.
- Make sure the product ventilation hole is not blocked. Install the product more than 100 mm (3.9 inches) from the wall.
  - If you install the product too close to the wall, it may be deformed or fire can break out due to internal heat build-up.
- Do not cover the product with cloth or other material (eg. plastic) while plugged in.
  - The product can be deformed or fire can break out due to internal overheating.
- Place the product on a flat and stable surface that is large enough to support the product.
  - If the product is dropped, you may be injured or the product may be broken.
- Install the product where no Electromagnetic Interference occurs.
- Keep the product away from direct sunlight.
  - The product can be damaged.
- Do not place the product on the floor.
  - Small Children and others may trip over it.
- Do not install this product on a wall if it could be exposed to oil or oil mist.
  - This may damage the product and cause it to fall.
- For displays with glossy bezels the user should consider the placement of the display as the bezel may cause unwanted reflections from surrounding light and bright surfaces.

Precautions for Moving the Product

WARNING

- Make sure to turn off the product.
  - You may be electrocuted or the product can be damaged.
- Make sure to remove all cables before moving the product.
  - You may be electrocuted or the product can be damaged.
- When lifting or moving the product, do not hold it upside down while holding only the stand.
  - This may cause the product to fall resulting in damage or injury.
- Do not shock the product when moving it.
  - You may be electrocuted or the product can be damaged.
- Make sure the panel faces forward and hold it with both hands to move.
  - If you drop the product, the damaged product can cause electric shock or fire.
- Do not place the product face down.
  - This may damage the TFT-LCD screen.

Precautions for Using/Cleaning the Product

WARNING

- Do not attempt to disassemble, repair or modify the product yourself.
  - Fire or electric shock can occur.
  - Contact LG Customer Service for repair.
- When cleaning the product, unplug the power cord and scrub gently with a soft cloth to prevent scratching. Do not clean with a wet cloth or spray water or other liquids directly onto the product. An electric shock may occur. (Do not use chemicals such as benzene, paint thinners or alcohol.)
- Keep the product away from water.
  - Fire or electric shock accident can occur.
- Avoid high temperatures and humidity.
- Do not put or store flammable substances near the product.
  - There is a danger of explosion or fire.

- Keep the product clean at all times.
- Take a comfortable and natural position when working with the product.
- Take a regular break when working with the product for a long time.
- Do not press on the panel with a hand or sharp object such as nail, pencil or pen, or make a scratch on it.
- Keep proper distance from the product and rest from time-to-time.
  - Your vision may be impaired if you look at the product too closely or for too long.
- Set the appropriate resolution by referring to the User's Guide.
- Keep small accessories out of the reach of children.
- Displaying a still image for long time on the monitor may leave persistent image or stain on the monitor screen. To avoid this problem, use a screen saver and power off when this product is not used. Persistent image or stain caused by long time usage are not covered by the warranty on this product.
- Do not use products using high voltage around the Monitor. (ex. Electrical Swatter)
  - Monitor may have malfunction as its electrical shock.
- Spray water onto a soft cloth 2 to 4 times, and use it to clean the front frame;wipe in one direction only. Too much moisture may cause staining.

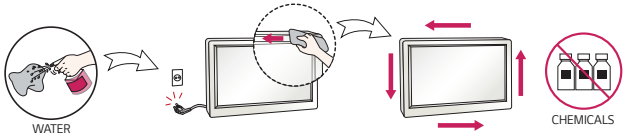

Product Disposal (Only, Hg lamp used LCD Monitor)

- The fluorescent lamp used in this product contains a small amount of mercury.
- Do not dispose of this product with general household waste.
- Disposal of this product must be carried out in accordance to the regulations of your local authority.

LICENSES

Supported licenses may differ by model. For more information of the licenses, visit *www.lg.com*.



The terms HDMI and HDMI High-Definition Multimedia Interface, and the HDMI Logo are trademarks or registered trademarks of HDMI Licensing Administrator, Inc. in the United States and other countries.

Manufactured under license from Dolby Laboratories. Dolby, Dolby Vision, Dolby Audio, Dolby Atmos, and the double-D symbol are trademarks of Dolby Laboratories.

For DTS patents, see *http://patents.dts.com*. Manufactured under license from DTS Licensing Limited. DTS, the Symbol, & DTS and the Symbol together, DTS 2.0 Channel, DTS 2.0+Digital Out, DTS-HD, and DTS Virtual:X are registered trademarks or trademarks of DTS, Inc. in the United States and/or other countries. © DTS, Inc. All Rights Reserved.

ASSEMBLY AND PREPARATION

⚠ CAUTION

- Always use genuine components to ensure safety and product performance.
- The product warranty will not cover damage or injury caused by the use of counterfeit components.
- Connect the power cord to the product before you plug it into a wall outlet. Plugging the power cord into a wall outlet first may cause an electric shock, which can also damage the product.

NOTE

- The accessories provided with your product may vary depending on the model or region.
- Product specifications or contents in this manual may be changed without prior notice due to upgrade of product functions.
- SuperSign Software & Manual
  - Downloading from the LG Electronics website.
  - Visit the LG Electronics website (*http://partner.lge.com*) and download the latest software for your model.
- The warranty will not cover any damage caused by using the product in an excessively dusty environment.

⚠ WARNING

- The product warranty does not cover any electrostatic damage to parts that may occur during product installation. Wear the appropriate gear that can prevent electrostatic discharge (ESD) when installing the product.
- The serial number on the panel and that on the signage box must match. If they do not, spots may appear on the screen or the product may not function properly.

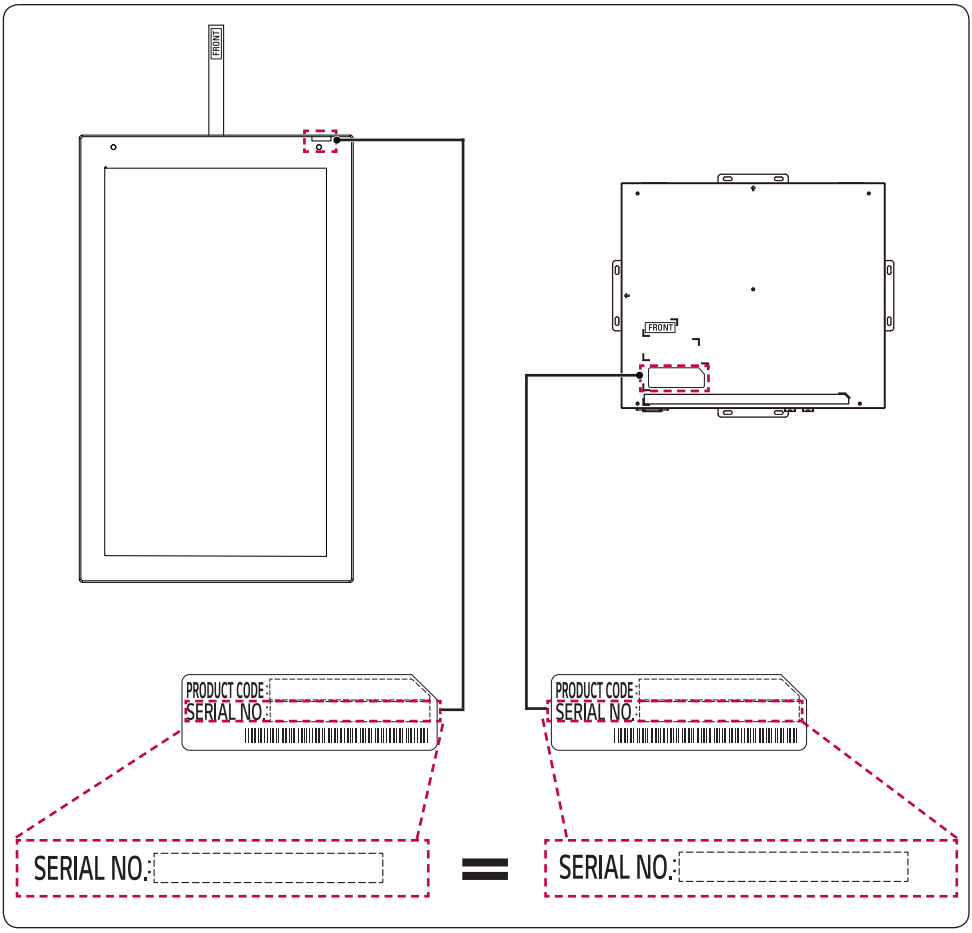

Installing on the ceiling

When installing, do not install more than 30 cm (11.8 inches) away from the ceiling for safe cable connection.

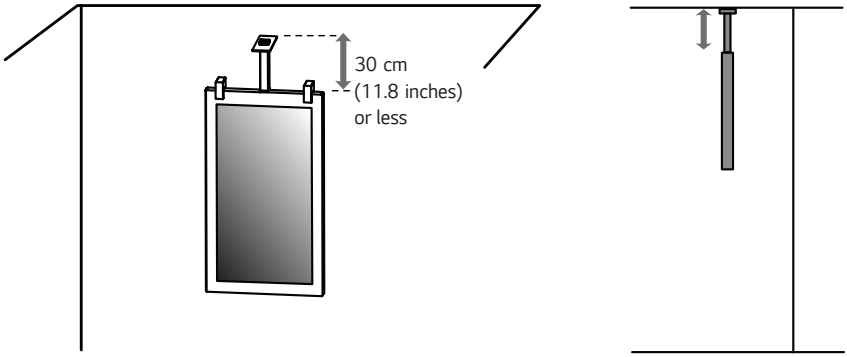

CAUTION

- Disconnect the power cord before moving or installing the monitor to avoid risk of electric shock.
- Use a stainless steel wire rope that can bear enough weight (100 kgf or above). (Sold separately)

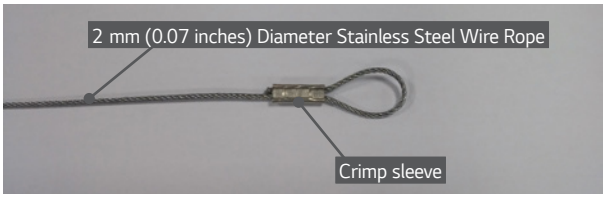

- If you are using an installation accessory, make sure that you use a stainless steel wire rope that is 2 mm (0.07 inches) in diameter.
  - Use a press for compression when using a crimp sleeve. If not, the wire may fall out.

NOTE

- The illustration shows a general example of installation and may look different from the actual product.
- The distance from the ceiling may be 30 cm (11.8 inches) or less after installation depending on the state of the ceiling.

External Equipment Setup

IR RECEIVER

This allows a remote control sensor to be placed in a custom location. Then that display can control other displays via an RS-232C cable.

REMOTE CONTROL

The descriptions in this manual are based on the buttons on the remote control. Please read this manual carefully to use the monitor correctly. To install batteries, open the battery cover, place batteries (1.5 V AAA) matching ⊕ and ⊖ terminals to the labels inside the compartment, and close the battery cover. To remove the batteries, perform the installation actions in reverse. The illustrations may differ from the actual accessories.

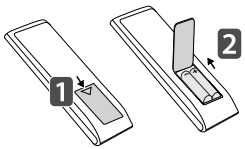

⚠ CAUTION

- Do not mix old and new batteries, as this may damage the remote control.
- Ensure the remote control is always pointed toward the monitor's IR receiver.
- Some features of the remote control may not be supported in certain models.

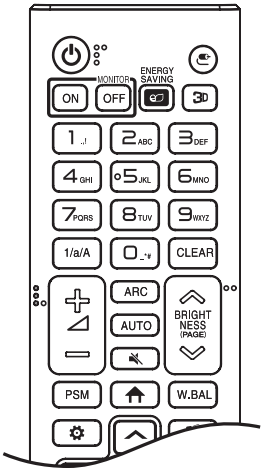

(POWER) Turns the monitor on or off.

MONITOR ON Turns the monitor on.

MONITOR OFF Turns the monitor off.

ENERGY SAVING Reduces power consumption by adjusting peak screen brightness.

(INPUT) Selects the input mode.

3D Used for viewing 3D videos.

1/a/A Toggles between numerical and alphabetical.

Number and Alphabet buttons

Enters numerical or alphabetical characters depending upon the setting.

CLEAR Deletes the entered numerical or alphabetical character.

Volume Up/Down Button Adjusts the volume.

ARC Selects the Aspect Ratio mode.

AUTO Automatically adjusts picture position and minimizes image instability (available for RGB input only).

(MUTE) Mutes all sounds.

BRIGHTNESS Adjusts the brightness of the display. PAGE function is not supported in this model.

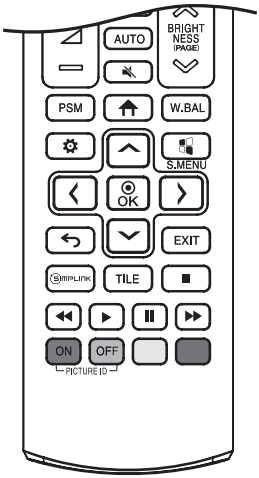

PSM Selects the Picture Mode.

(HOME) Activates the Launcher.

W.BAL Enters the White Balance menu.

(SETTINGS) Accesses the main menus or saves your input and exit menus.

S.MENU SuperSign menu key.

Navigation Buttons Scrolls through menus or options.

OK Selects menus or options and confirms your input.

(BACK) Allows you to move back one step in the user interaction function.

EXIT Quit all OSD tasks and applications.

SIMPLINK Allows you to control various multimedia devices to enjoy multimedia simply by using the remote control through the SimpLink menu.

TILE Selects the TILE Mode.

PICTURE ID ON/OFF When the Picture ID number matches the Set ID number, you can control whichever monitor you want in multi-display format.

USB Menu Control Buttons Controls media playback.

Trick key May not be supported on some models.

MAKING CONNECTIONS

You can connect various external devices to your monitor. Change the input mode and select the external device you want to connect. For more information about external device connections, see the user manual provided with each device.

Connecting to a PC

Some of the cables are not provided. This monitor supports the Plug and Play* feature.

* Plug and Play: a feature that enables a PC to recognize devices attached by the user without device configuration or user intervention when powering up.

External Device Connection

Some of the cables are not provided. Connect a HD receiver, DVD, or VCR player to the monitor and select an appropriate input mode.

For the best picture and sound quality, connecting external devices to your monitor using HDMI cables is recommended.

NOTE

- For the best image quality, using the monitor with HDMI connection is recommended.
- To comply with the specifications of the product, use a shielded interface cable with ferrite core, such as a HDMI cable.
- If you turn the monitor on when the set is cold, the screen may flicker. This is normal.
- Sometimes red, green, or blue spots may appear on the screen. This is normal.
- Use a High Speed HDMI®/™ cable (shorter than 3 meters (9.8 ft)).
- Use a certified cable with the HDMI logo attached. If you do not use a certified HDMI cable, the screen may not display or a connection error may occur.
- Recommended HDMI Cable Types
  - High-Speed HDMI®/™ Cable
  - High-Speed HDMI®/™ Cable with Ethernet
- If you cannot hear any sound in HDMI mode please check your PC settings. Some PCs require you to manually change the default audio output to HDMI.
- If you want to use HDMI-PC mode, you must set your PC/DTV to PC mode.
- You may experience compatibility issues if you use HDMI-PC mode.
- Make sure the power cable is disconnected.
- If you connect a gaming device to the monitor, use the cable provided with the gaming device.

CAUTION

- Do not press the screen with your finger for a prolonged period as this may result in temporary distortion on the screen.
- Avoid displaying static images on the screen for a long period of time to prevent image retention. Use a screensaver if possible.
- A wireless communication device near your monitor can affect the image.

Using the Input List

(HOME) → 

- HDMI → DISPLAYPORT

TROUBLESHOOTING

No image is displayed.

Problem	Action
Is the product power cord connected?	• Check if the power cord is correctly plugged into the power outlet.
Is the FFC cable properly connected?	• Make sure the FFC cable is properly connected between the cable coming out of the panel and signage box.
Does the “Invalid Format” message appear?	• The signal from the PC (Graphics card) is out of the vertical or horizontal frequency range of the product. Adjust the frequency range by referring to the Specifications in this manual.
Does the “No Signal” message appear?	• The signal cable between PC and product is not connected. Check the signal cable. • Access the input menu to check the input signal.

The “Unknown Product” message appears when the product is connected.

Problem	Action
Did you install the driver?	• Check if the Plug and Play function is supported by referring to the graphics card user manual.

The screen image looks abnormal.

Problem	Action
Is the screen position wrong?	• Check if the graphics card resolution and frequency are supported by the product. If the frequency is out of range, set to the recommended resolution in the (Control Panel → Display → Setting) menu. (The settings may differ depending on your operating system.)
The screen is displayed abnormally.	• The proper input signal is not connected to the signal port. Connect the signal cable that matches with the source input signal. • The OLED panel and Signage box are not properly connected. Check their serial numbers and make sure they match. Once the serial numbers are matched, unplug the power cord then reconnect it to run the [Clear Panel Noise] function. (The product will reboot automatically after it runs.) You can also run the function in ⚙ (Settings) → [Display] → [Advanced Settings] → [OLED Panel Settings] → [Clear Panel Noise].

The audio function does not work.

Problem	Action
No sound?	• See if the audio cable is connected properly. • See if the sound is set properly.
Sound is too dull.	• Select the appropriate equalizer sound.

Screen color is abnormal.

Problem	Action
Screen has poor color resolution (16 colors).	• Set the number of colors to more than 24 bits (true color). Select (Control Panel → Display → Settings → Color Table) in Windows. (The settings may differ depending on your operating system.)
Screen color is unstable or mono-colored.	• Check the connection status of the signal cable. Or, re-insert the PC graphics card.
Do black spots appear on the screen?	• Several pixels (red, green, blue, white, or black color) may appear on the screen, which can be attributable to the unique characteristics of the OLED panel. This is not a malfunction of the OLED.

The operation does not work normally.

Problem	Action
The power suddenly turned off.	• Is the Timer set? • Check the power control settings. Power interrupted. • Are the fans functioning properly? - View the fan status in HOME → [Information] → [Fan Status].

⚠ CAUTION

- Image sticking may occur when displaying a fixed image for an extended period of time. It is recommended that you display videos for 18 hours or less per day to decrease the likelihood of image sticking.
- A few horizontal lines may appear on the screens while running the [Clear Panel Noise] feature (OFF-RS). This is normal, so there is no need for concern. Turning the power on while the [Clear Panel Noise] feature (OFF-RS) is operating may cause the product to malfunction. The external speakers connected to the product may make a sound while you are running the [Clear Panel Noise] feature (OFF-RS).
- OFF-RS: Removes image sticking through TFT degradation compensation. Runs after 4 hours of use.
  JB: Removes image sticking through OLED degradation compensation. Runs after 2000 hours of use.

PRODUCT SPECIFICATIONS

The product specifications below may be changed without prior notice due to upgrade of product functions.
" ~ " refers to alternating current (AC), and " ⎓ " refers to direct current (DC).

OLED screen	Pixel Pitch	0.630 mm (H) X 0.630 mm (V)
	Screen type	Thin Film Transistor (TFT) OLED Screen
Operating conditions	Daily usage	18 hours (video)
Video signal	Maximum resolution	HDMI/ DisplayPort : 3840 x 2160 @ 30 Hz - This may not be supported on some OS or graphics card types.
	Recommended resolution	HDMI/ DisplayPort : 1920 x 1080 @ 60 Hz - This may not be supported on some OS or graphics card types.
	Horizontal frequency	HDMI/ DisplayPort : 30 kHz to 83 kHz
	Vertical frequency	HDMI/ DisplayPort : 50 Hz to 60 Hz
	Synchronization	Separate Sync/ Digital
Input/ Output ports	IR IN, RS-232C IN/OUT, AUDIO OUT, HDMI IN, DP IN/OUT, USB IN 1/2, LAN IN/OUT	
Embedded battery		Applied
Environmental Conditions	Operating Temperature	0 °C to 40 °C (32 °F to 104 °F)
	Operating Humidity	10 % to 80 %
	Storage Temperature	-20 °C to 60 °C (-4 °F to 140 °F)
	Storage Humidity	5 % to 85 %
Power	Rated Voltage	AC 100-240 V ~ 50/60 Hz 3.7 A
	Power Consumption	On Mode : 309 W (Typ.) Sleep Mode (HDMI, DisplayPort) : ≤ 3.0 W Off Mode : ≤ 0.5 W
Dimensions (Width x Height x Depth) / Weight	Display Module	861.3 X 1406.2 X 13 (mm) / 28.5 (kg) (33.9 X 55.3 X 0.5 (inches) / 62.8 (lbs))
	Signage Box	413 X 353 X 57.3 (mm) / 3.16 (kg) (16.2 X 13.8 X 2.2 (inches) / 6.9 (lbs))

Display

[Unit : mm (inches)]

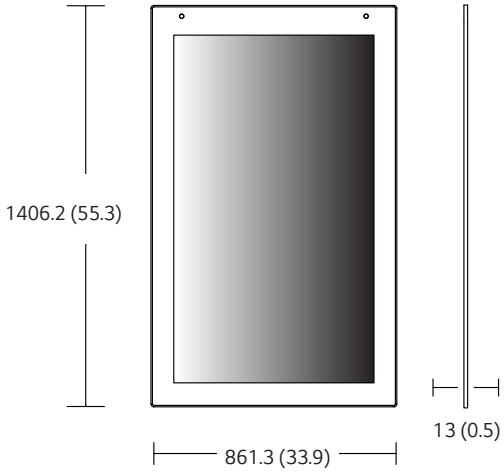

Signage Box

[Unit : mm (inches)]

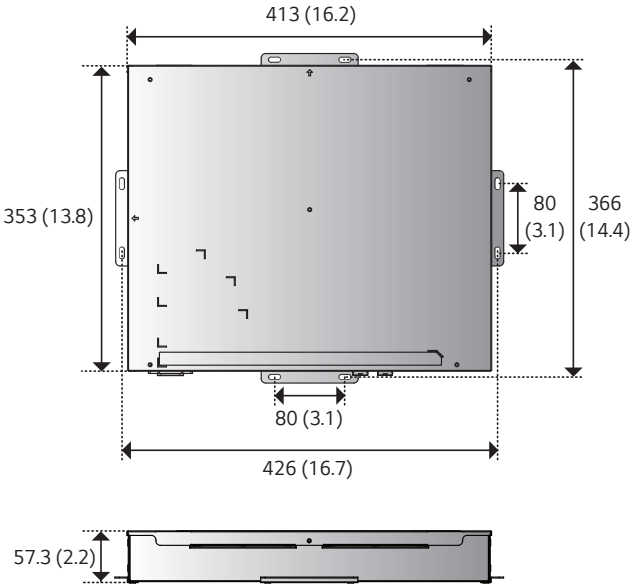

HDMI/ DisplayPort (PC) Support mode

Resolution	Horizontal frequency (kHz)	Vertical frequency (Hz)
800 x 600	37.879	60.317
1024 x 768	48.363	60
1280 x 720	44.772	59.855
1366 x 768	47.7	60
1280 x 1024	63.981	60.02
1680 x 1050	65.29	59.954
1920 x 1080	67.5	60
3840 x 2160	67.5	30

HDMI/ DisplayPort (DTV) Support Mode

Resolution	Horizontal frequency (kHz)	Vertical frequency (Hz)
480/60p	31.5	60
576/50p	31.25	50
720/50p	37.5	50
720/60p	45	60
1080/50i	28.1	50
1080/60i	33.75	60
1080/50p	56.25	50
1080/60p	67.432	59.94
1080/60p	67.5	60
2160/30p	67.5	30

NOTE

- Resolutions available for the Input Label option in HDMI/ DisplayPort input modes.
  - PC resolutions: 1280 x 720 / 60 Hz, 1920 x 1080 / 60 Hz
  - DTV resolutions: 480p, 720p and 1080p
- Vertical frequency: The product display functions by the screen image changing dozens of times every second like a fluorescent lamp. The vertical frequency or refresh rate is the number of image displays per second. The unit is Hz.
- Horizontal frequency: The horizontal interval is the time taken to display one horizontal line. When 1 is divided by the horizontal interval, the number of horizontal lines displayed every second can be tabulated as the horizontal frequency. The unit is kHz.



Make sure to read the Safety Precautions before using the product.

The model and serial number of the product are located on the back and on one side of the product.

Record them below in case you ever need service.

MODEL _____

SERIAL _____

Supplier's Declaration of Conformity	
Trade Name	LG
Responsible Party	LG Electronics USA, Inc.
Address	1000 Sylvan Ave Englewood Cliffs, NJ 07632
Telephone	(201)266-2215

Temporary noise is normal when powering ON or OFF this device.