

LuxSpace Accent Fresh Food

RS752B LED27S/ROSE PSE-E VWB WH

LuxSpace Accent Performance G3 - Rosé - Power supply unit external, DC compatible for central emergency lighting - Very wide beam - - - Push-in connector and pull relief - White

Retailers are increasingly having to contend with rising energy prices. At the same time, they need to retain high-quality lighting to catch the customer's eye, as well as flexibility in architectural integration. Food retailers generally want superior light sources that illuminate their fresh food counters in the freshest way possible, making food appealing while keeping the light ambiance attractive and welcoming. When a warm light ambiance is preferred, Fresh Food Champagne is the perfect LED solution to light fruit, vegetables, cheese, bread and pastries. Fresh Food Rose is a perfect warm-light solution for meat counters, enhancing the redness of meat but also slowing down the discoloration of sliced meat. When a brighter or more natural light ambiance is preferred, Fresh Food Authentic White is recommended for fruits, vegetables, cheeses, bread and pastries. Fresh Food Meat creates the best light setting for meat enhancement in a cooler ambiance.

Product data

General Information	
Number of light sources	1 pc
Beam angle of light source	120 °
Light source color	Rosé
Light source replaceable	No
Number of gear units	1 unit
Driver/power unit/transformer	Power supply unit external, DC compatible for central emergency lighting

Driver included	Yes
Optic type	Very wide beam
Optical cover/lens type	-
Luminaire light beam spread	54°
Control interface	-
Connection	Push-in connector and pull relief
Cable	-
Protection class IEC	Safety class II

LuxSpace Accent Fresh Food

Glow-wire test	Temperature 650 °C, duration 5 s
Flammability mark	For mounting on normally flammable surfaces
CE mark	CE mark
ENEC mark	ENEC mark
UL mark	-
Warranty period	5 years
Remarks	*-Per Lighting Europe guidance paper "Evaluating performance of LED based luminaires - January 2018": statistically there is no relevant difference in lumen maintenance between B50 and for example B10. Therefore the median useful life (B50) value also represents the B10 value.
Constant light output	No
Number of products on MCB of 16 A type B	12
RoHS mark	RoHS mark
Product family code	RS752B [LuxSpace Accent Performance G3]

Operating and Electrical

Input Voltage	220 to 240 V
Input Frequency	50 to 60 Hz
Initial CLO power consumption	- W
Average CLO power consumption	- W
Inrush current	32 A
Inrush time	0.25 ms
Power Factor (Min)	0.9

Controls and Dimming

Dimmable	No

Mechanical and Housing

Housing Material	Aluminum
Reflector material	Aluminum
Optic material	Polycarbonate
Optical cover/lens material	Polycarbonate
Fixation material	-
Optical cover/lens finish	Frosted
Overall length	231 mm
Overall width	168 mm
Overall height	126 mm
Overall diameter	168 mm

Approval and Application

Ingress protection code	IP20 [Finger-protected]
Mech. impact protection code	IK02 [0.2 J standard]

Initial Performance (IEC Compliant)

Initial luminous flux (system flux)	2600 lm
Luminous flux tolerance	+/-10%
Initial LED luminaire efficacy	54.2 lm/W
Init. Corr. Color Temperature	2200 K
Init. Color Rendering Index	≥80
Initial chromaticity	(0.48, 0.38)
Initial input power	48 W
Power consumption tolerance	+/-10%

Over Time Performance (IEC Compliant)

Control gear failure rate at median useful life 50000 h	5 %
Lumen maintenance at median useful life* 50000 h	L80

Application Conditions

Ambient temperature range	+10 to +40 °C
Performance ambient temperature Tq	25 °C
Suitable for random switching	Yes (relates to presence/ movement detection and daylight harvesting)

Product Data

Full product code	871869916751600
Order product name	RS752B LED27S/ROSE PSE-E VWB WH
EAN/UPC - Product	8718699167516
Order code	910500459462
Numerator - Quantity Per Pack	1
Numerator - Packs per outer box	1
Material Nr. (12NC)	910500459462
Net Weight (Piece)	1.325 kg

LuxSpace Accent Fresh Food

Dimensional drawing

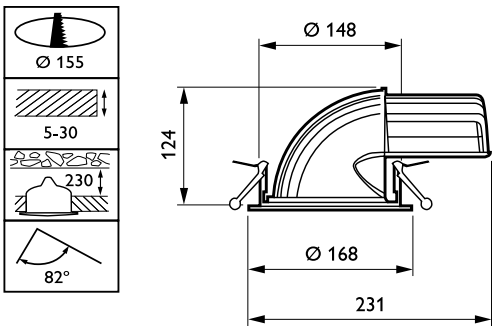

LuxSpace Accent RS730B-RS752B

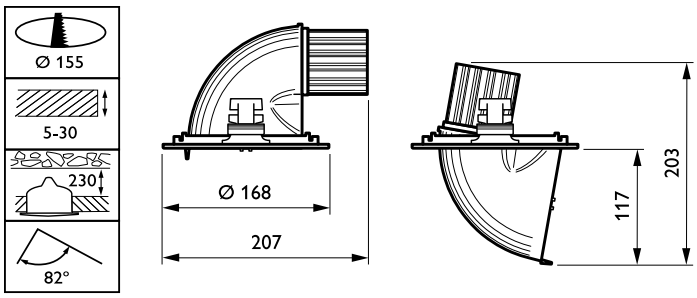

LuxSpace Accent RS730B-RS752B

© 2019 Signify Holding All rights reserved. Signify does not give any representation or warranty as to the accuracy or completeness of the information included herein and shall not be liable for any action in reliance thereon. The information presented in this document is not intended as any commercial offer and does not form part of any quotation or contract, unless otherwise agreed by Signify. Philips and the Philips Shield Emblem are registered trademarks of Koninklijke Philips N.V.