

# GreenSpace Accent Projector

## ST320T LED17S/CRW PSU MB WH

GREENSPACE ACCENT PROJECTOR - LED module 1700 lm - Crisp white - Power supply unit - Medium beam - White

Thanks to the GreenSpace Accent family, retailers and building operators can now make the switch from CDM to LED and enjoy the benefits of Philips PerfectAccent light quality as well as significant energy savings – all for a reasonable initial investment. GreenSpace Accent Projector's regular 3C adaptor and specific lumen packages make retrofit installation quick and easy. For fashion and food retailers, the GreenSpace Accent Projector is available with special light flavours and LED recipes to show the clothes and fresh food produce on offer in the very best light. Check out our Fashion and Food catalogue pages to find out more about CrispWhite, PremiumWhite, Fresh Food Meat and Fresh Food Champagne.

### Product data

| General Information | |
|---|---|
| **Number of light sources** | 1 [ 1 pc] |
| **Lamp family code** | LED17 [ LED module 1700 lm] |
| **Beam angle of light source** | 120 ° |
| **Light source colour** | Crisp white |
| **Cap base** | - [ -] |
| **Light source replaceable** | No |
| **Number of gear units** | 1 unit |
| **Driver/power unit/transformer** | PSU [ Power supply unit] |
| **Driver included** | Yes |
| **Optic type** | MB [ Medium beam] |
| **Optical cover/lens type** | PM [ PMMA bowl/cover] |

| | |
|---|---|
| **Luminaire light beam spread** | 24° |
| **Connection** | - |
| **Cable** | - |
| **Protection class IEC** | Safety class II |
| **Mounting** | 3C-69 [ 3-circuit power track adapter GA69 (connection point) for XTS and XTSF tracks] |
| **Glow-wire test** | Temperature 650 °C, duration 5 s |
| **Flammability mark** | F [ For mounting on normally flammable surfaces] |
| **CE mark** | CE mark |
| **ENEC mark** | ENEC mark |
| **UL mark** | No |

# GreenSpace Accent Projector

| | |
|---|---|
| **Warranty period** | 5 years |
| **Remarks** | *-Per Lighting Europe guidance paper "Evaluating performance of LED based luminaires - January 2018": statistically there is no relevant difference in lumen maintenance between B50 and for example B10. Therefore the median useful life (B50) value also represents the B10 value. |
| **Constant light output** | No |
| **Number of products on MCB** | 32 |
| **RoHS mark** | RoHS mark |
| **Product Family Code** | ST320T [ GREENSPACE ACCENT PROJECTOR] |

## Operating and Electrical

| | |
|---|---|
| **Input voltage** | 220-240 V |
| **Input frequency** | 50 to 60 Hz |
| **Inrush current** | 18.6 A |
| **Inrush time** | 0.240 ms |
| **Power factor (min.)** | 0.9 |

## Controls and Dimming

| | |
|---|---|
| **Dimmable** | No |

## Mechanical and Housing

| | |
|---|---|
| **Housing material** | Aluminium |
| **Reflector material** | Polycarbonate aluminium coated |
| **Optic material** | Polycarbonate |
| **Optical cover/lens material** | Polymethyl methacrylate |
| **Fixation material** | Polyamide |
| **Optical cover/lens finish** | Clear |
| **Overall length** | 182 mm |
| **Overall width** | 114 mm |
| **Overall height** | 193 mm |

## Approval and Application

| | |
|---|---|
| **Ingress protection code** | IP20 [ Finger-protected] |
| **Mech. impact protection code** | IK02 [ 0.2 J standard] |

## Initial Performance (IEC Compliant)

| | |
|---|---|
| **Initial luminous flux** | 1700 lm |
| **Luminous flux tolerance** | +/-10% |
| **Initial LED luminaire efficacy** | 79 lm/W |
| **Init. Corr. colour temperature** | 3000 K |
| **Init. colour rendering index** | ≥95 |
| **Initial chromaticity** | (0.43, 0.40) SDCM<3 |
| **Initial input power** | 21.5 W |
| **Power consumption tolerance** | +/-10% |

## Over Time Performance (IEC Compliant)

| | |
|---|---|
| **Control gear failure rate at median useful life 50000 h** | 5 % |
| **Lumen maintenance at median useful life* 50000 h** | L80 |

## Application Conditions

| | |
|---|---|
| **Ambient temperature range** | +10 to +40 °C |
| **Performance ambient temperature Tq** | 25 °C |
| **Suitable for random switching** | Yes (relates to presence/ movement detection and daylight harvesting) |

## Product Data

| | |
|---|---|
| **Full product code** | 871869916655700 |
| **Order product name** | ST320T LED17S/CRW PSU MB WH |
| **EAN/UPC – product** | 8718699166557 |
| **Order code** | 16655700 |
| **Numerator – quantity per pack** | 1 |
| **Numerator – packs per outer box** | 1 |
| **Material no. (12NC)** | 910500459373 |
| **Net weight (piece)** | 0.980 kg |

## Dimensional drawing

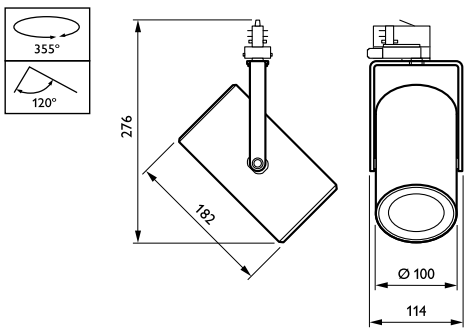


**GreenSpace Accent ST315T-ST330T**

# GreenSpace Accent Projector

## Photometric data

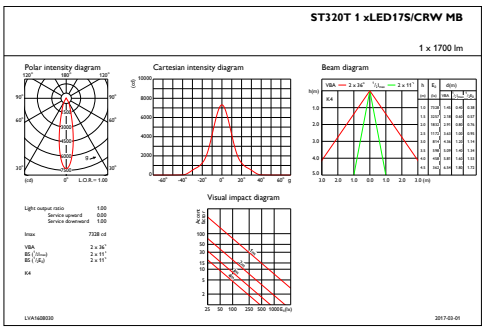


IFAS1_ST320T1xLED17SCRWMB

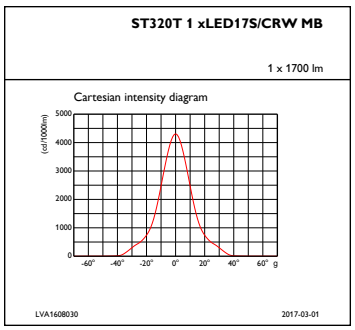


IFCC1_ST320T1xLED17SCRWMB

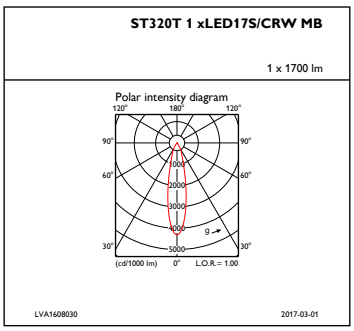


IFPC1_ST320T1xLED17SCRWMB

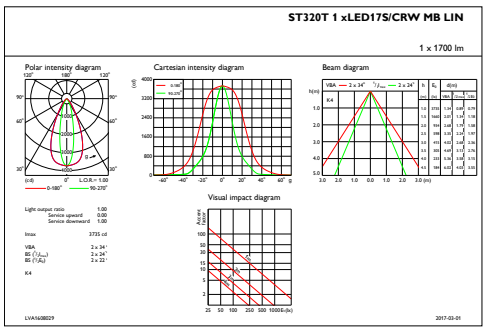


IFAS1_ST320T1xLED17SCRWMBLIN

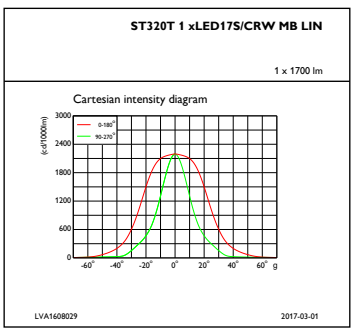


IFCC1_ST320T1xLED17SCRWMBLIN

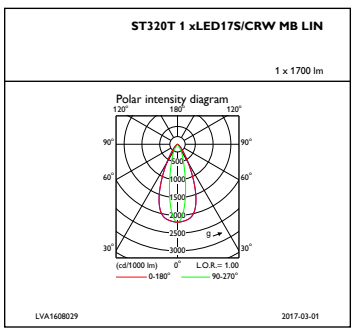


IFPC1_ST320T1xLED17SCRWMBLIN

# GreenSpace Accent Projector

## Photometric data

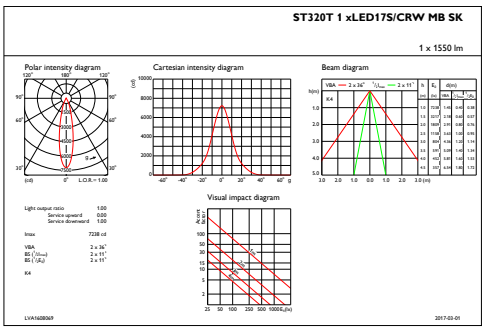


IFAS1_ST320T1xLED17SCRWMBSK

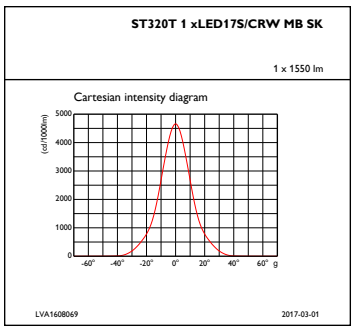


IFCC1_ST320T1xLED17SCRWMBSK

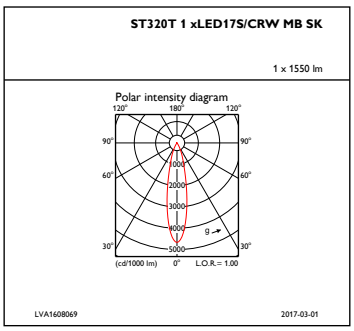


IFPC1_ST320T1xLED17SCRWMBSK

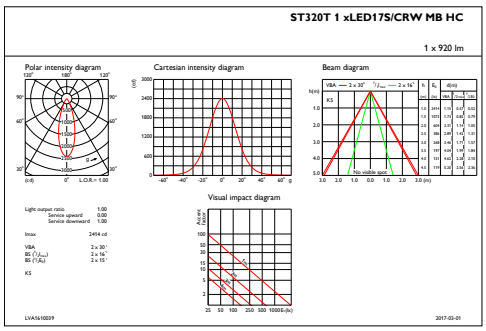


IFAS1_ST320T1xLED17SCRWMBHC

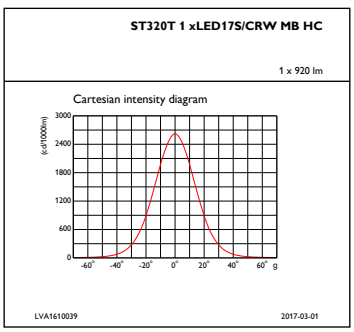


IFCC1_ST320T1xLED17SCRWMBHC

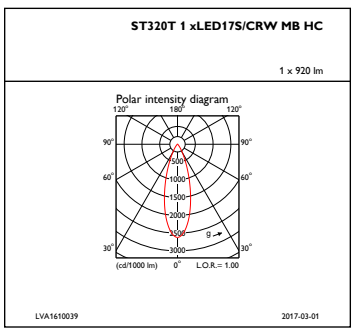


IFPC1_ST320T1xLED17SCRWMBHC

# GreenSpace Accent Projector

© 2019 Signify Holding All rights reserved. Signify does not give any representation or warranty as to the accuracy or completeness of the information included herein and shall not be liable for any action in reliance thereon. The information presented in this document is not intended as any commercial offer and does not form part of any quotation or contract, unless otherwise agreed by Signify. Philips and the Philips Shield Emblem are registered trademarks of Koninklijke Philips N.V.

www.lighting.philips.com
2019, February 26 - data subject to change