PHILIPS

Lighting



ClearFlood

BVP650 LED440-4S/740 DX10 ALU PSU

ClearFlood - LED module 44000 lm - LED - Power supply unit - Distribution extra wide 10 - Grey

The Philips ClearFlood is a dedicated LED floodlight delivering economical white light solutions for recreational sports and area applications. Designed around state-of-the-art LEDs and high-efficiency optics, this very competitive solution offers energy savings compared to traditional HID solutions.ClearFlood is easy to install and perfect for replacing conventional light points as it uses the same electrical installation, columns and types of fixation.

Product data

General Information	
Lamp family code	LED440 [LED module 44000 lm]
Light source colour	740 neutral white
Light source replaceable	Yes
Number of gear units	2 units
Driver/power unit/transformer	PSU [Power supply unit]
Driver included	Yes
Optical cover/lens type	FG [Flat glass]
Luminaire light beam spread	20° - 4° x 150°
Connection	Connection unit 3-pole
Cable	-
Protection class IEC	Safety class I
Flammability mark	F [For mounting on normally flammable surfaces]
CE mark	CE mark
ENEC mark	ENEC mark
Warranty period	5 years

Outdoor optic type	Distribution extra wide 10
Remarks	*-Per Lighting Europe guidance paper "Evaluating performance of LED based luminaires - January 2018": statistically there is no relevant difference in lumen maintenance between B50 and for example B10. Therefore the median useful life (B50) value also represents the B10 value.
Constant light output	No
Number of products on MCB	4
RoHS mark	RoHS mark
LED engine type	LED
Product Family Code	BVP650 [ClearFlood]

Light Technical	
Upward light output ratio	0
Standard tilt angle post-top	0°

ClearFlood

Standard tilt angle side entry	0°

Operating and Electrical

Input voltage	220-240 V
Input frequency	50 to 60 Hz
Inrush current	53 A
Inrush time	0.300 ms
Power factor (min.)	0.99

Controls and Dimming

Dimmable	No

Mechanical and Housing

Housing material	Aluminium die-cast
Reflector material	-
Optic material	Acrylate
Optical cover/lens material	Glass
Fixation material	Steel
Mounting device	MBA [Mounting bracket adjustable]
Optical cover/lens shape	Flat
Optical cover/lens finish	Clear
Overall length	562 mm
Overall width	580 mm
Overall height	95 mm
Effective projected area	0.26 m²

Approval and Application

Ingress protection code	IP66 [Dust penetration-protected, jet-proof]
Mech. impact protection code	IK09 [10 J]

Initial Performance (IEC Compliant)

Initial luminous flux	35519 lm
Luminous flux tolerance	+/-7%
Initial LED luminaire efficacy	117 lm/W
Init. Corr. colour temperature	4000 K
Init. colour rendering index	≥70
Initial chromaticity	(0.380, 0.390) SDCM <5
Initial input power	300 W
Power consumption tolerance	+/-11%

Over Time Performance (IEC Compliant)

Control gear failure rate at median useful life 100000 h	10 %
Lumen maintenance at median useful life* 100000 h	L85

Application Conditions

Ambient temperature range	-40 to +50 °C
Performance ambient temperature Tq	25 °C

Product Data

Full product code	871869912899900
Order product name	BVP650 LED440-4S/740 DX10 ALU PSU
EAN/UPC – product	8718699128999
Order code	12899900
Numerator – quantity per pack	1
Numerator – packs per outer box	1
Material no. (12NC)	912300023958
Net weight (piece)	16.150 kg

Dimensional drawing

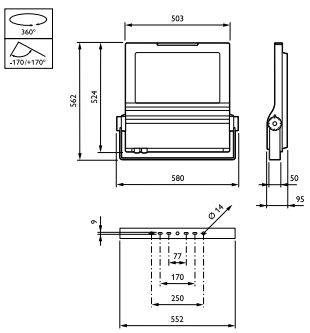

ClearFlood BVP650/651

ClearFlood

Photometric data

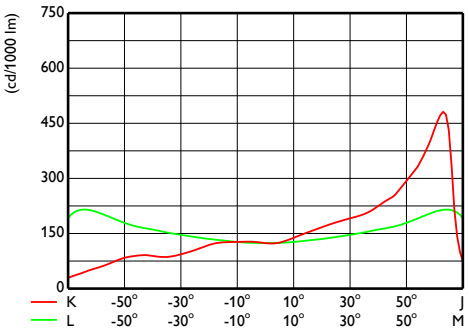

OFCS1_BVP650T251xLED440-4S740DX10

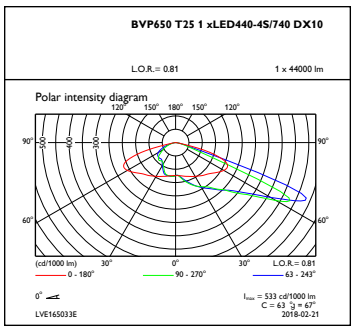

OFPC1_BVP650T251xLED440-4S740DX10

© 2019 Signify Holding All rights reserved. Signify does not give any representation or warranty as to the accuracy or completeness of the information included herein and shall not be liable for any action in reliance thereon. The information presented in this document is not intended as any commercial offer and does not form part of any quotation or contract, unless otherwise agreed by Signify. Philips and the Philips Shield Emblem are registered trademarks of Koninklijke Philips N.V.