

LuxSpace Accent

RS752B LED49S/827 PSED-VLC-E WB WH LIN

LuxSpace Accent Performance G3 - 827 warm white - Power supply unit with DALI interface external, DC compatible for central emergency lighting - Wide beam - Linear-lens array oval shape - Push-in connector and pull relief - White

Retailers are increasingly having to contend with rising energy prices. At the same time, they need to retain the quality of light they are used to, flexibility in architectural integration, and the right light effects to catch the customer's eye. Last but not least, they need future-proof solutions that will enable them to implement differentiating concepts in their store. Delivering high-quality light, punch in the beam and outstanding luminous efficacy, LuxSpace Accent is the ideal energy-efficient solution for today's demanding retail environments, covering a wide variety of lighting applications, including CrispWhite and PremiumWhite for fashion stores and Food recipes for supermarkets.

Product data

General Information	
Number of light sources	1 pc
Beam angle of light source	120 °
Light source color	827 warm white
Light source replaceable	No
Number of gear units	1 unit
Driver/power unit/transformer	Power supply unit with DALI interface external, DC compatible for central emergency lighting
Driver included	Yes
Optic type	Wide beam
Optical cover/lens type	Linear-lens array oval shape

Luminaire light beam spread	30° x 60°
Control interface	DALI
Connection	Push-in connector and pull relief
Cable	-
Protection class IEC	Safety class II
Glow-wire test	Temperature 650 °C, duration 5 s
Flammability mark	For mounting on normally flammable surfaces
CE mark	CE mark
ENEC mark	ENEC mark
UL mark	-
Warranty period	5 years

LuxSpace Accent

Remarks	*-Per Lighting Europe guidance paper "Evaluating performance of LED based luminaires - January 2018": statistically there is no relevant difference in lumen maintenance between B50 and for example B10. Therefore the median useful life (B50) value also represents the B10 value.
Constant light output	No
Number of products on MCB of 16 A type B	30
RoHS mark	RoHS mark
Product family code	RS752B [LuxSpace Accent Performance G3]

Operating and Electrical

Input Voltage	220 to 240 V
Input Frequency	50 to 60 Hz
Control signal voltage	0-16 V DC DALI
Initial CLO power consumption	- W
Average CLO power consumption	- W
Inrush current	5.3 A
Inrush time	0.7 ms
Power Factor (Min)	0.9

Controls and Dimming

Dimmable	Yes

Mechanical and Housing

Housing Material	Aluminum
Reflector material	Aluminum
Optic material	Polycarbonate
Optical cover/lens material	Polycarbonate
Fixation material	-
Optical cover/lens finish	Clear
Overall length	231 mm
Overall width	168 mm
Overall height	126 mm
Overall diameter	168 mm

Approval and Application

Ingress protection code	IP20 [Finger-protected]
Mech. impact protection code	IK02 [0.2 J standard]

Initial Performance (IEC Compliant)

Initial luminous flux (system flux)	4700 lm
Luminous flux tolerance	+/-10%
Initial LED luminaire efficacy	116 lm/W
Init. Corr. Color Temperature	2700 K
Init. Color Rendering Index	≥80
Initial chromaticity	(0.46, 0.41) SDCM <3
Initial input power	40.5 W
Power consumption tolerance	+/-10%

Over Time Performance (IEC Compliant)

Control gear failure rate at median useful life 50000 h	5 %
Lumen maintenance at median useful life* 50000 h	L80

Application Conditions

Ambient temperature range	+10 to +40 °C
Performance ambient temperature Tq	25 °C
Maximum dim level	1%
Suitable for random switching	Yes (relates to presence/ movement detection and daylight harvesting)

Product Data

Full product code	871869916744800
Order product name	RS752B LED49S/827 PSED-VLC-E WB WH LIN
EAN/UPC - Product	8718699167448
Order code	910500459455
Numerator - Quantity Per Pack	1
Numerator - Packs per outer box	1
Material Nr. (12NC)	910500459455
Net Weight (Piece)	1.325 kg

LuxSpace Accent

Dimensional drawing

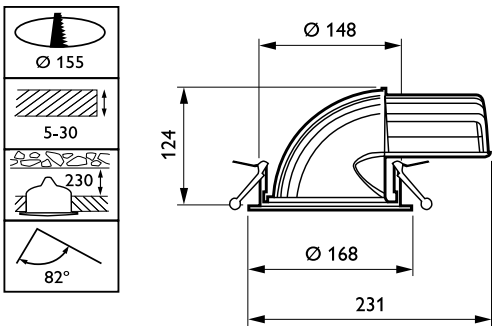

LuxSpace Accent RS730B-RS752B

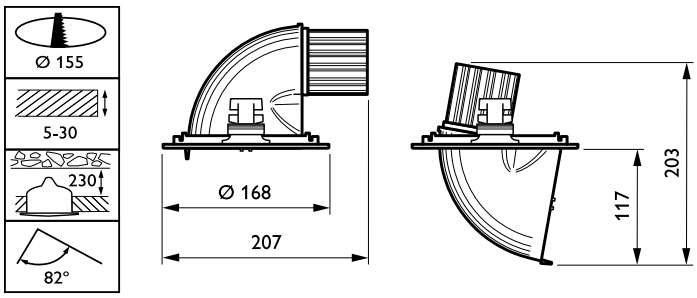

LuxSpace Accent RS730B-RS752B

Photometric data

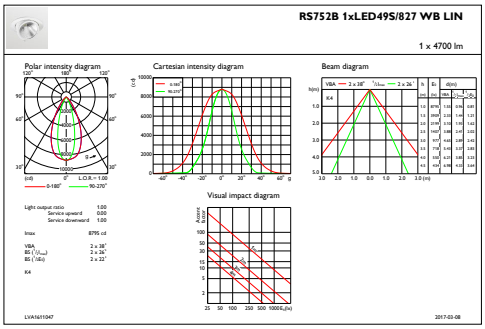

IFAS1_RS752B1xLED49S827WBLIN

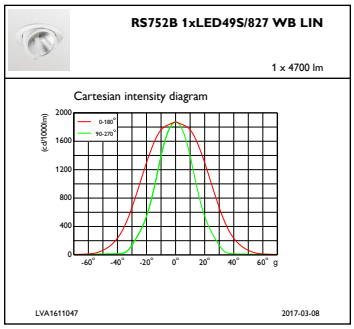

IFCC1_RS752B1xLED49S827WBLIN

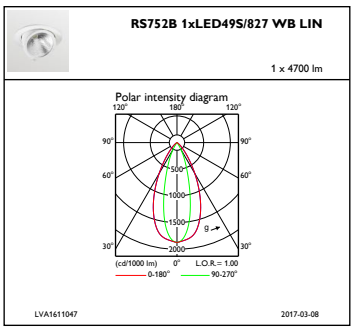

IFPC1_RS752B1xLED49S827WBLIN

LuxSpace Accent

© 2019 Signify Holding All rights reserved. Signify does not give any representation or warranty as to the accuracy or completeness of the information included herein and shall not be liable for any action in reliance thereon. The information presented in this document is not intended as any commercial offer and does not form part of any quotation or contract, unless otherwise agreed by Signify. Philips and the Philips Shield Emblem are registered trademarks of Koninklijke Philips N.V.

www.lighting.philips.com
2019, February 12 - data subject to change