

GreenSpace Accent Projector

ST320T LED39S/840 PSU VWB WH

GREENSPACE ACCENT PROJECTOR - LED module 3900 lm - 840 neutral white - Power supply unit - Very wide beam - White

Thanks to the GreenSpace Accent family, retailers and building operators can now make the switch from CDM to LED and enjoy the benefits of Philips PerfectAccent light quality as well as significant energy savings – all for a reasonable initial investment. GreenSpace Accent Projector's regular 3C adaptor and specific lumen packages make retrofit installation quick and easy. For fashion and food retailers, the GreenSpace Accent Projector is available with special light flavours and LED recipes to show the clothes and fresh food produce on offer in the very best light. Check out our Fashion and Food catalogue pages to find out more about CrispWhite, PremiumWhite, Fresh Food Meat and Fresh Food Champagne.

Product data

General Information	
Number of light sources	1 [1 pc]
Lamp family code	LED39 [LED module 3900 lm]
Beam angle of light source	120 °
Light source colour	840 neutral white
Cap base	- [-]
Light source replaceable	No
Number of gear units	1 unit
Driver/power unit/transformer	PSU [Power supply unit]
Driver included	Yes
Optic type	VWB [Very wide beam]
Optical cover/lens type	PM [PMMA bowl/cover]

Luminaire light beam spread	54°
Connection	-
Cable	-
Protection class IEC	Safety class II
Mounting	3C-69 [3-circuit power track adapter GA69 (connection point) for XTS and XTSF tracks]
Glow-wire test	Temperature 650 °C, duration 5 s
Flammability mark	F [For mounting on normally flammable surfaces]
CE mark	CE mark
ENEC mark	ENEC mark
UL mark	No

GreenSpace Accent Projector

Warranty period	5 years
Remarks	*-Per Lighting Europe guidance paper "Evaluating performance of LED based luminaires - January 2018": statistically there is no relevant difference in lumen maintenance between B50 and for example B10. Therefore the median useful life (B50) value also represents the B10 value.
Constant light output	No
Number of products on MCB	20
RoHS mark	RoHS mark
Product Family Code	ST320T [GREENSPACE ACCENT PROJECTOR]

Operating and Electrical

Input voltage	220-240 V
Input frequency	50 to 60 Hz
Inrush current	22 A
Inrush time	0.260 ms
Power factor (min.)	0.9

Controls and Dimming

Dimmable	No

Mechanical and Housing

Housing material	Aluminium
Reflector material	Polycarbonate aluminium coated
Optic material	Polycarbonate
Optical cover/lens material	Polymethyl methacrylate
Fixation material	Polyamide
Optical cover/lens finish	Clear
Overall length	182 mm
Overall width	114 mm
Overall height	193 mm

Approval and Application

Ingress protection code	IP20 [Finger-protected]
Mech. impact protection code	IK02 [0.2 J standard]

Initial Performance (IEC Compliant)

Initial luminous flux	3900 lm
Luminous flux tolerance	+/-10%
Initial LED luminaire efficacy	118 lm/W
Init. Corr. colour temperature	4000 K
Init. colour rendering index	≥80
Initial chromaticity	(0.38, 0.38) SDCM<3
Initial input power	33 W
Power consumption tolerance	+/-10%

Over Time Performance (IEC Compliant)

Control gear failure rate at median useful life 50000 h	5 %
Lumen maintenance at median useful life* 50000 h	L80

Application Conditions

Ambient temperature range	+10 to +40 °C
Performance ambient temperature Tq	25 °C
Suitable for random switching	Yes (relates to presence/ movement detection and daylight harvesting)

Product Data

Full product code	871869916676200
Order product name	ST320T LED39S/840 PSU VWB WH
EAN/UPC – product	8718699166762
Order code	16676200
Numerator – quantity per pack	1
Numerator – packs per outer box	1
Material no. (12NC)	910500459394
Net weight (piece)	0.980 kg

Dimensional drawing

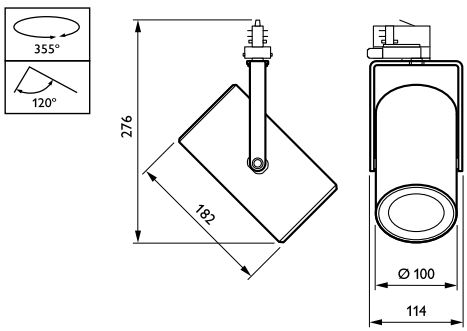

GreenSpace Accent ST315T-ST330T

GreenSpace Accent Projector

Photometric data

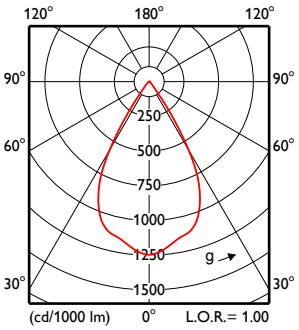

IFAS1_ST320T1xLED39S840VWB

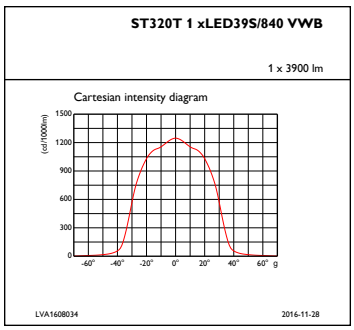

IFCC1_ST320T1xLED39S840VWB

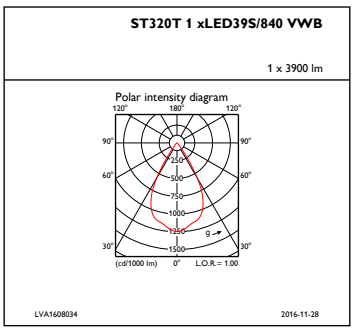

IFPC1_ST320T1xLED39S840VWB

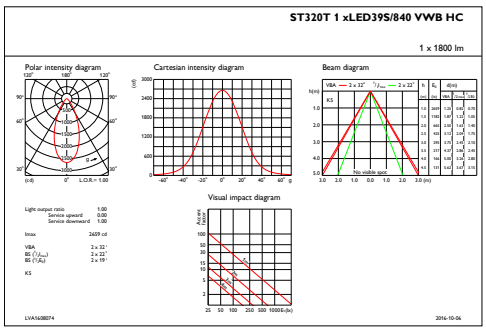

IFAS1_ST320T1xLED39S840VWBHC

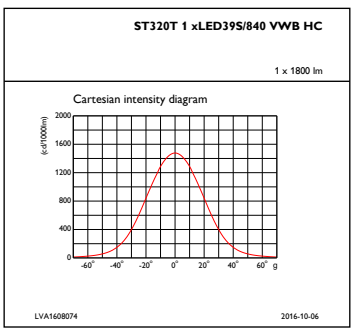

IFCC1_ST320T1xLED39S840VWBHC

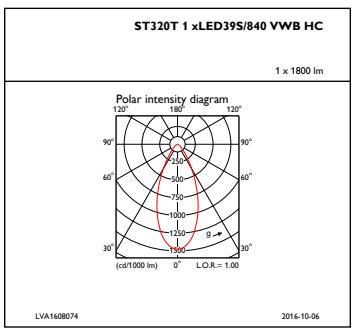

IFPC1_ST320T1xLED39S840VWBHC

GreenSpace Accent Projector

Photometric data

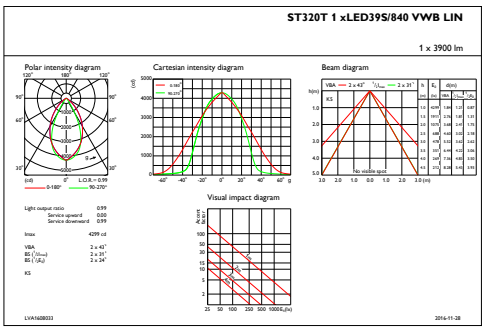

IFAS1_ST320T1xLED39S840VWBLIN

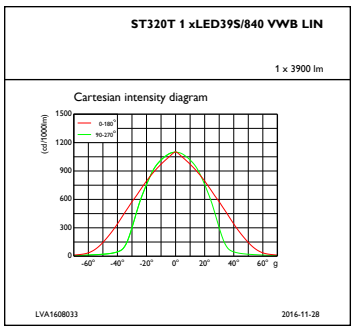

IFCC1_ST320T1xLED39S840VWBLIN

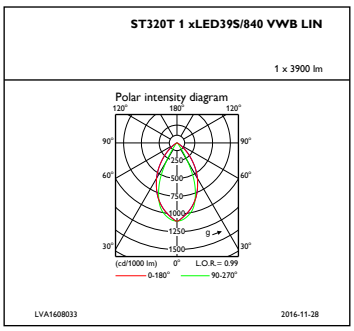

IFPC1_ST320T1xLED39S840VWBLIN

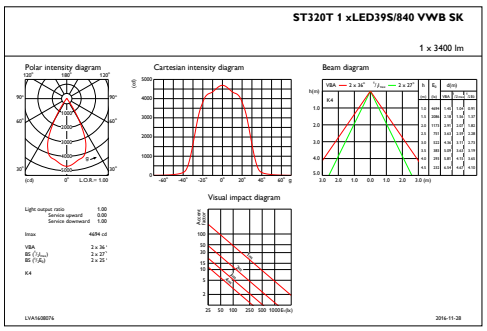

IFAS1_ST320T1xLED39S840VWBSK

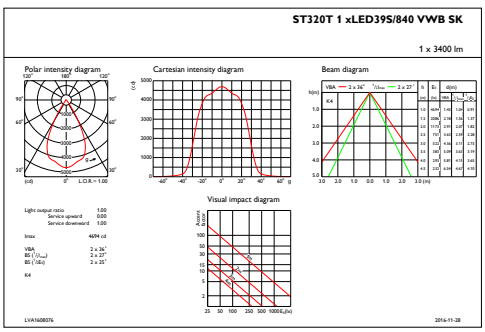

IFCC1_ST320T1xLED39S840VWBSK

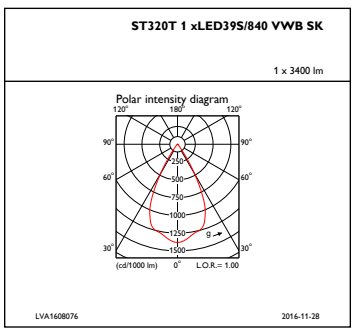

IFPC1_ST320T1xLED39S840VWBSK

GreenSpace Accent Projector

© 2019 Signify Holding All rights reserved. Signify does not give any representation or warranty as to the accuracy or completeness of the information included herein and shall not be liable for any action in reliance thereon. The information presented in this document is not intended as any commercial offer and does not form part of any quotation or contract, unless otherwise agreed by Signify. Philips and the Philips Shield Emblem are registered trademarks of Koninklijke Philips N.V.

www.lighting.philips.com
2019, February 12 - data subject to change