Instruction Book
Mode d'emploi

PURE F9



www.electrolux.com

www.electrolux.com/productregistration

support.emea.electrolux.com



CONSUMABLES & ACCESSORIES

www.electrolux.com/shop

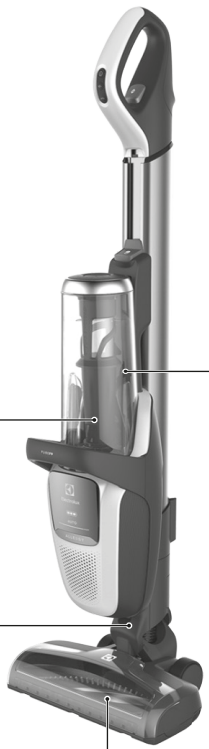

PUREF9 Performance Kit
Ref: ESPK9
Part nr: 900169078/4



3in1 Nozzle
Ref: ZE127
Part nr: 900922924/7



Home & Car kit
Ref: KIT18
Part nr: 900922934/6







Citrus Burst
Ref: ESMA
Part nr: 9001677807

Evening Rose
Ref: ESRO
Part nr: 9001677765



S-fresh 18 Value pack
Ref: ESVP1
Part nr: 9001681221



Main brush roll all-floors & carpet
Ref: ESBA9
Part nr: 9009229478

Long flexible crevice nozzle
Ref: ZE121
Part nr: 9009229619



Micro kit
Ref: KIT05
Part nr: 9009229601



1

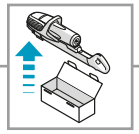

1

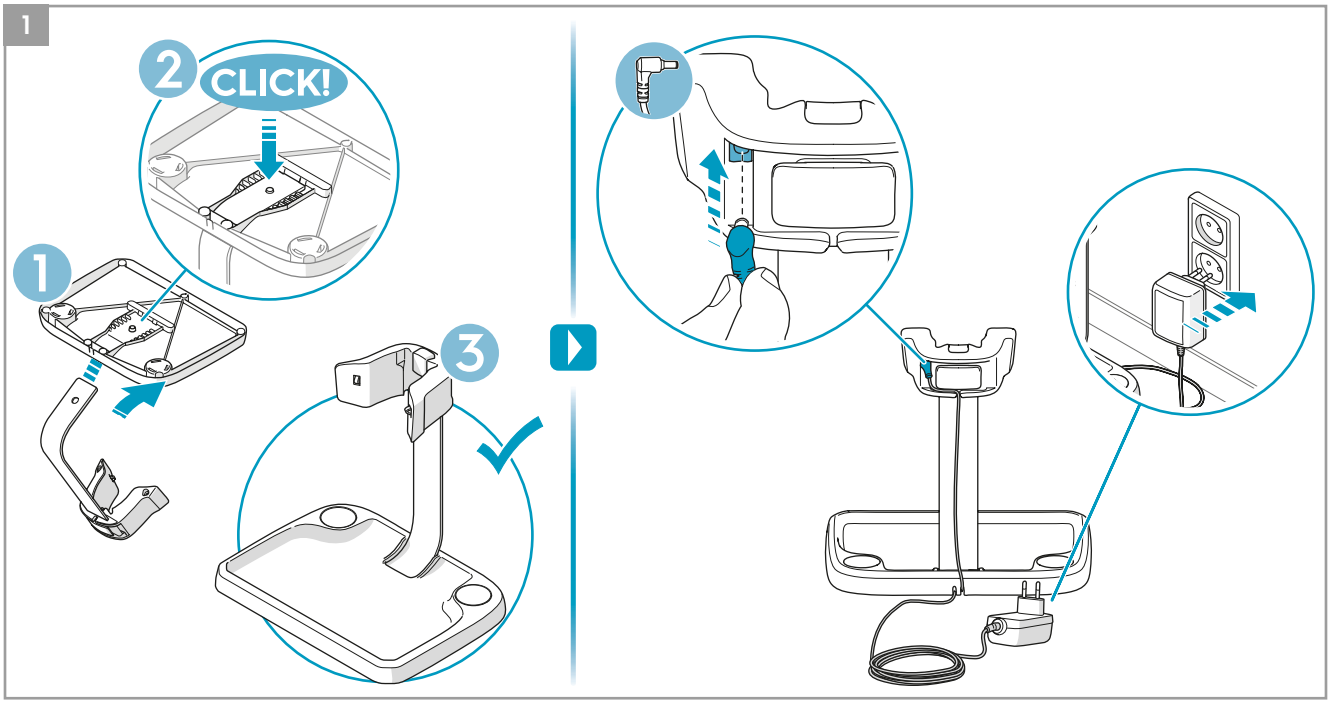

2

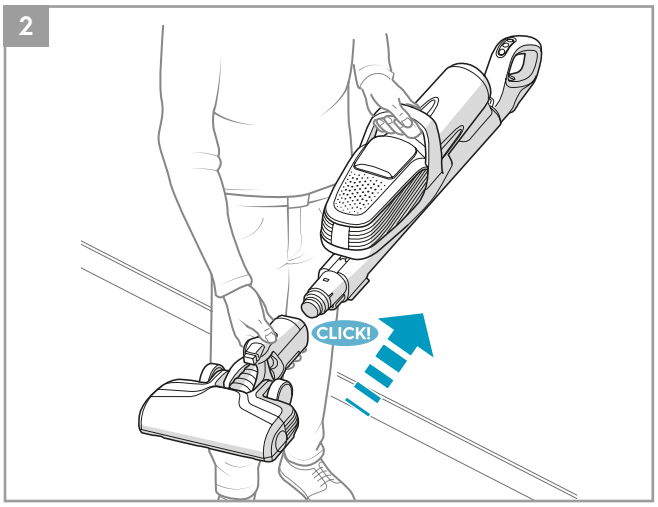

3

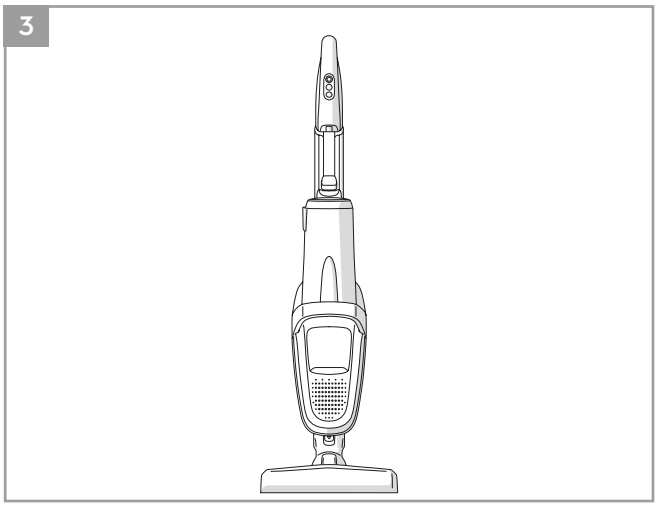

4

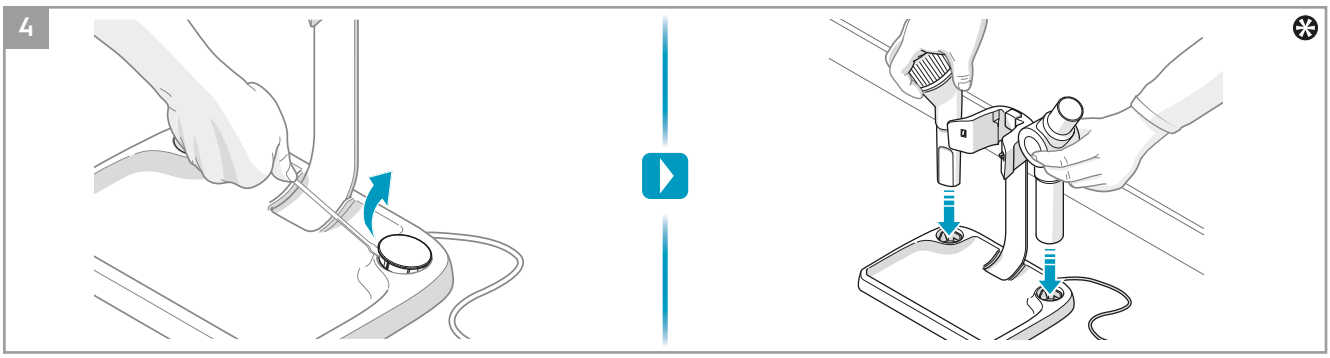

PF91-6XXX, PF91-ANIMA, PF91-ALRGY

2

1

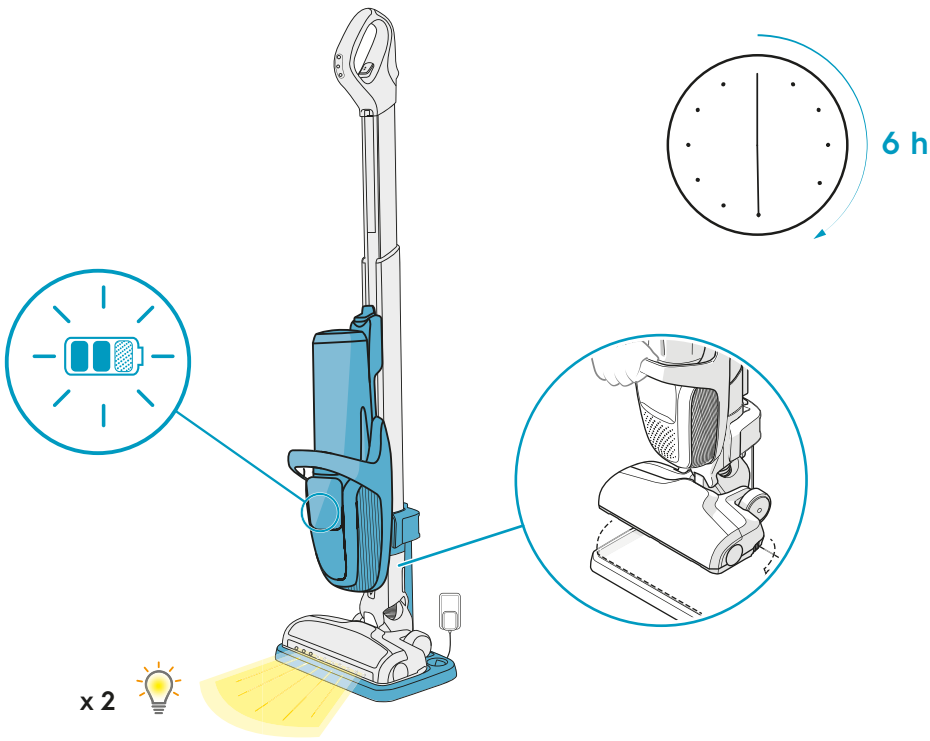

2

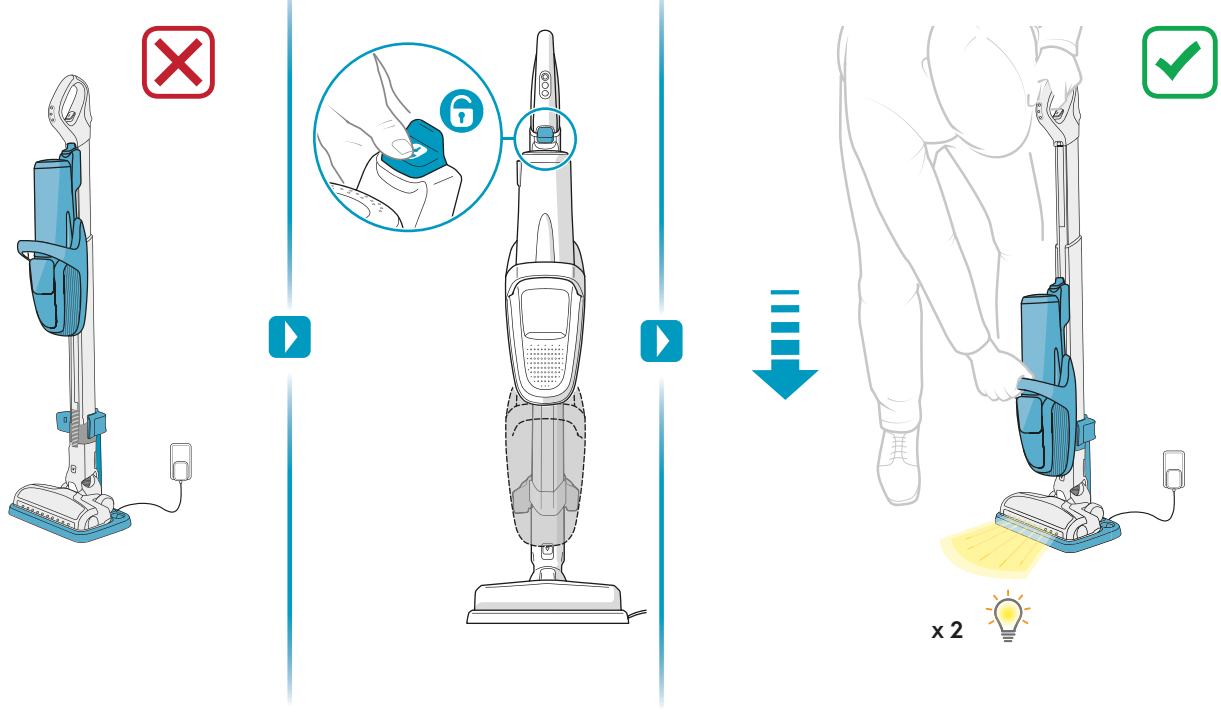

3

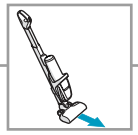

1

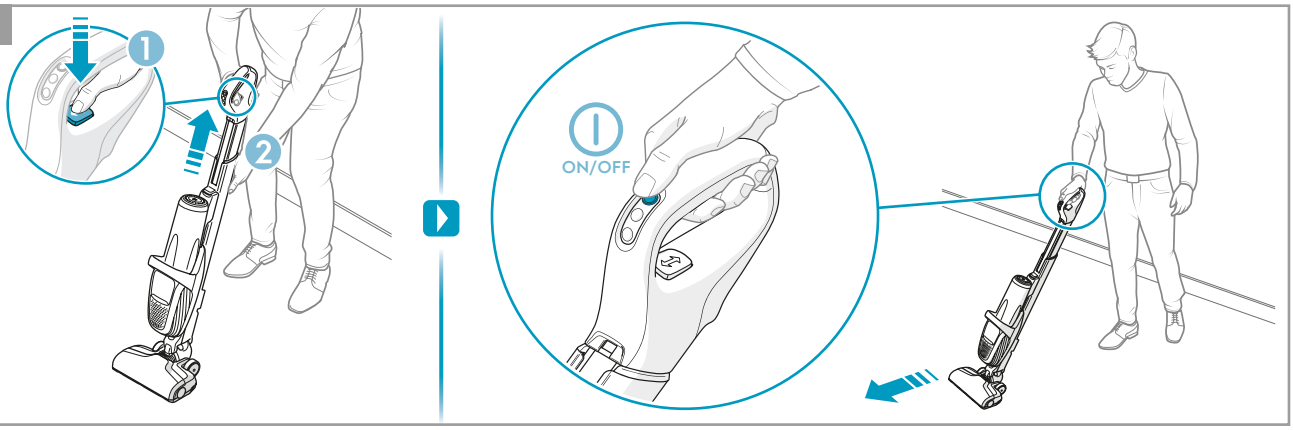

2

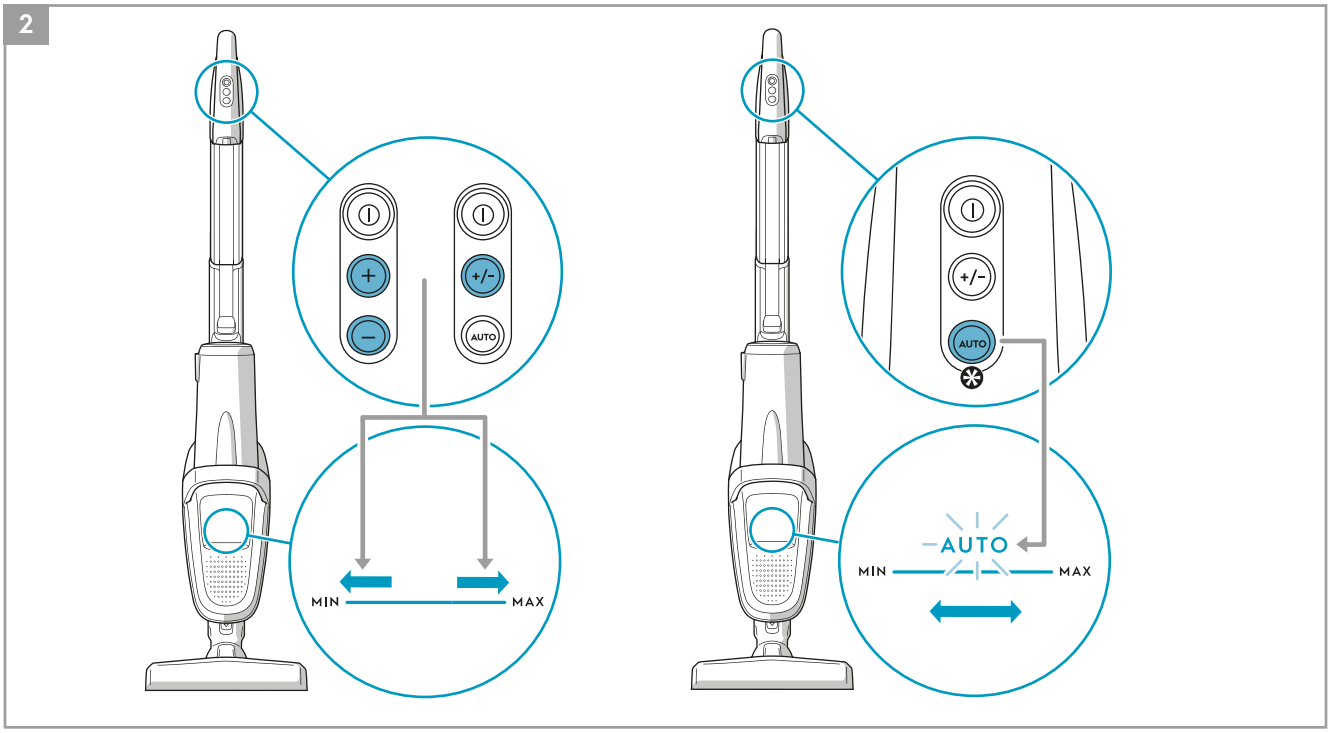

PF91-6XXX, PF91-ANIMA, PF91-ALRGY

4



1

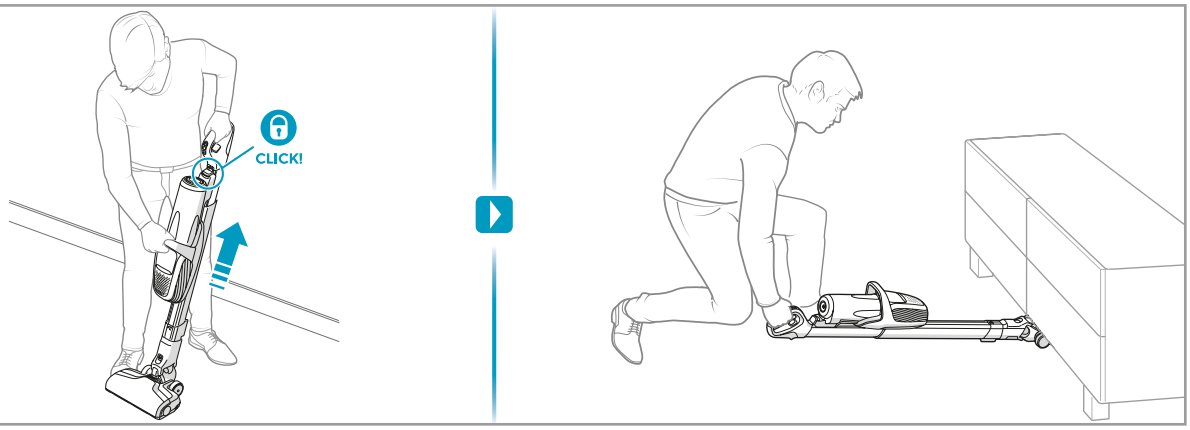

2

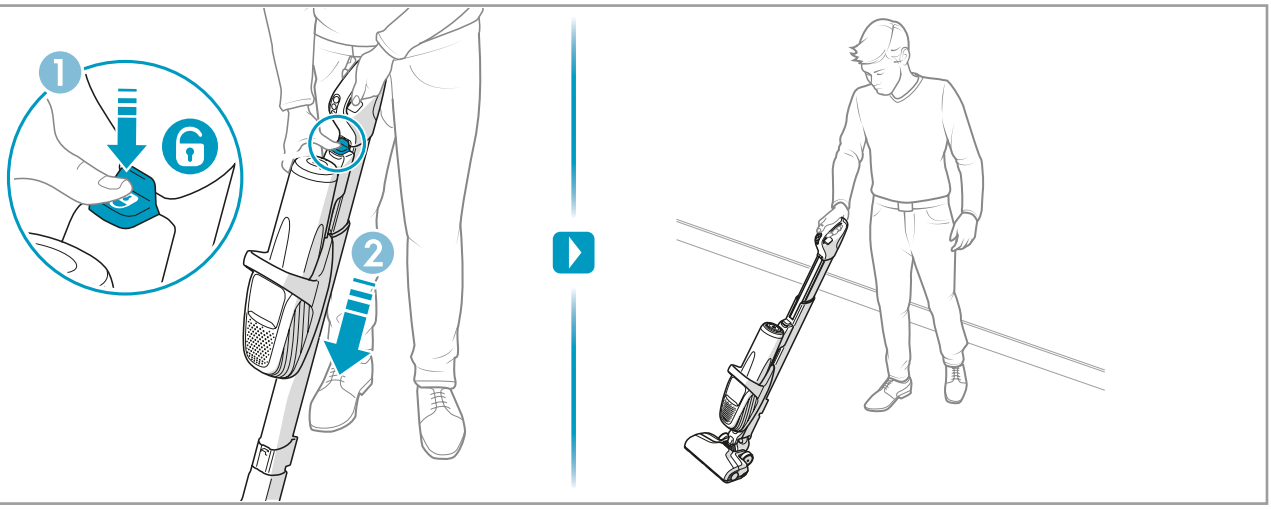

5

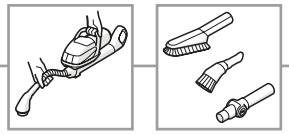

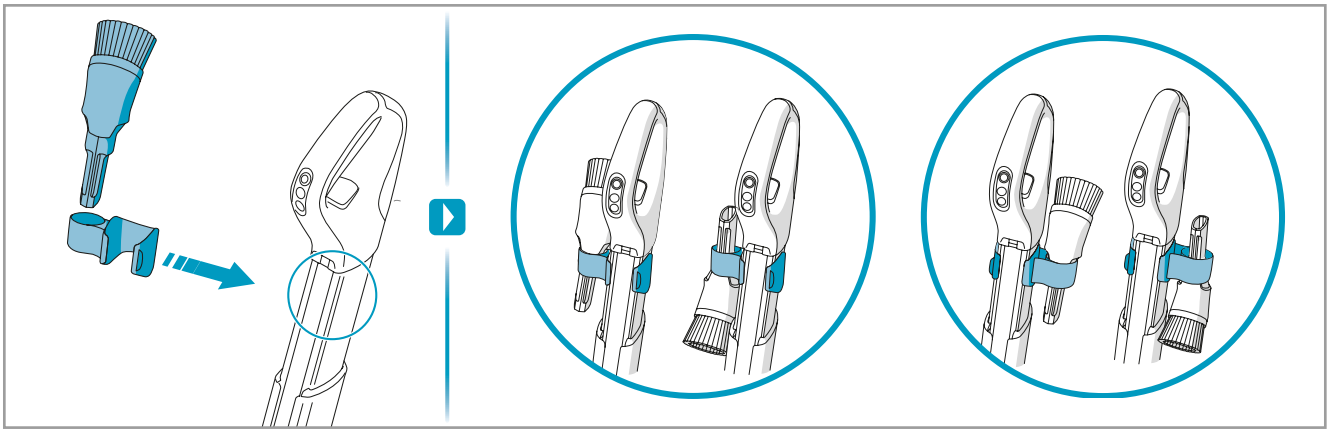

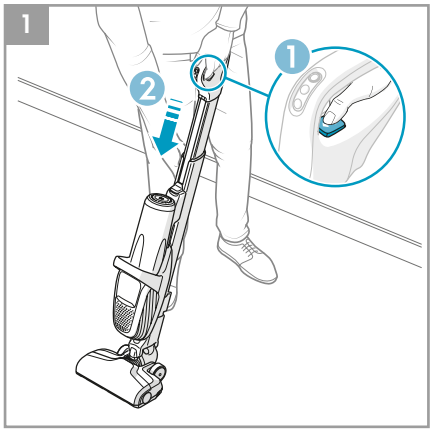

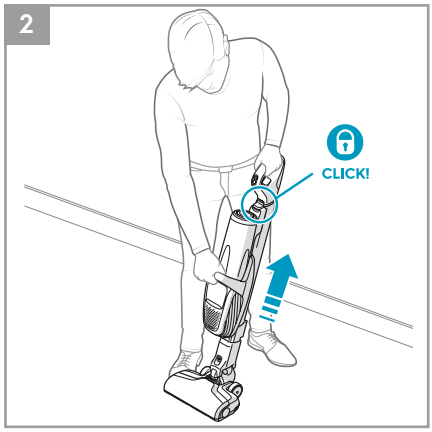

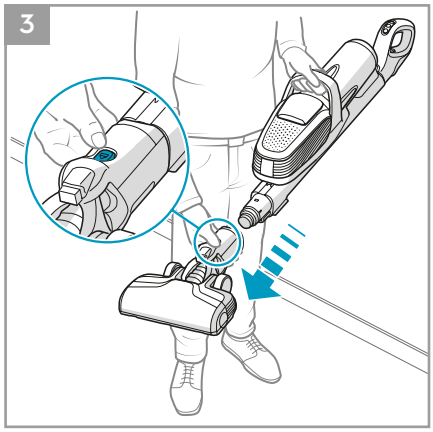

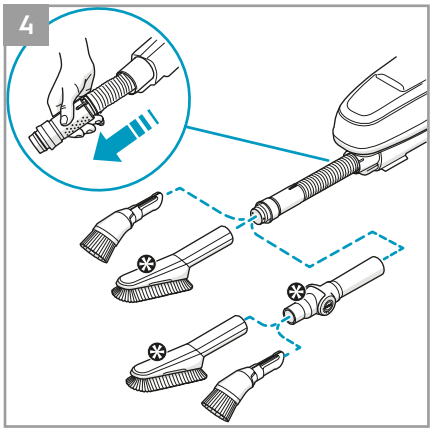

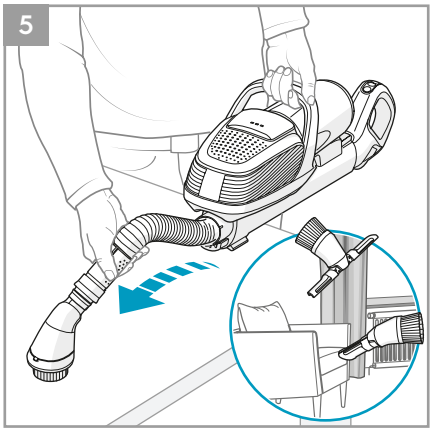



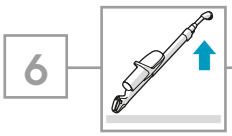

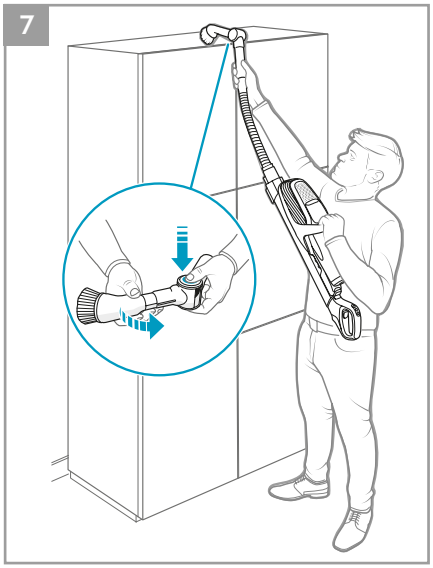

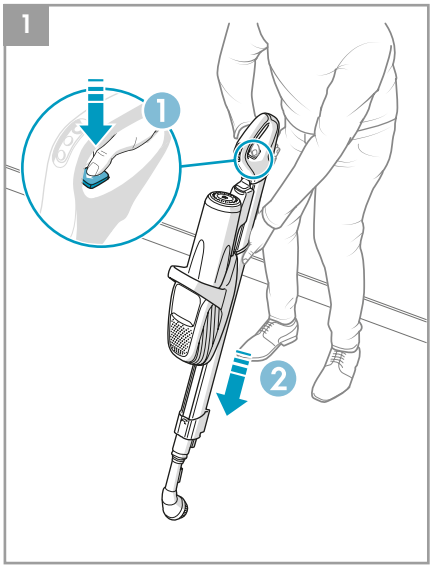

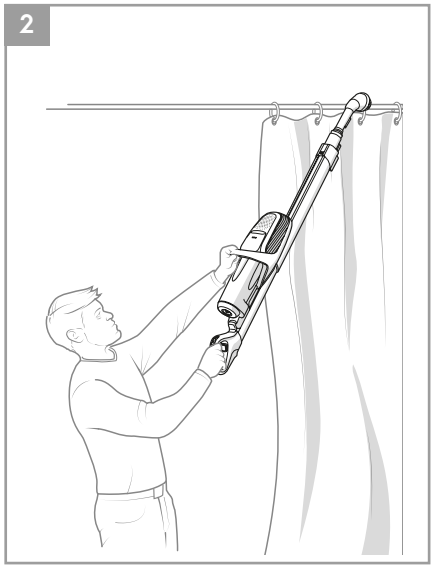

Certain models only


7

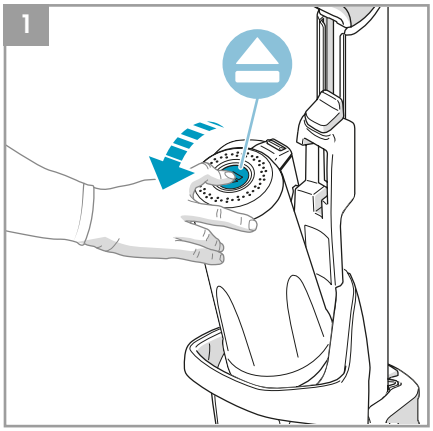
1

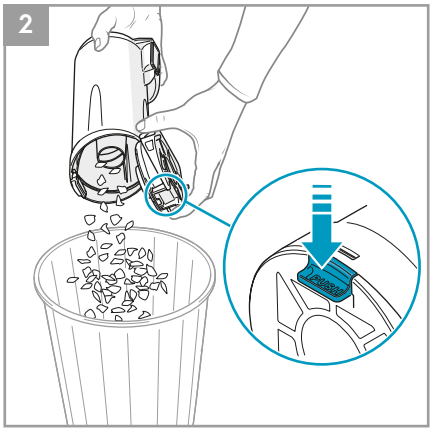
2

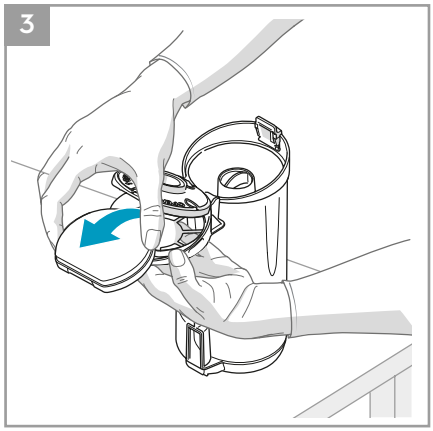
3

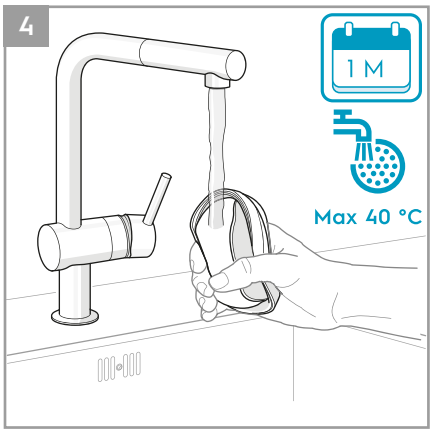
4
1 M
Max 40 °C

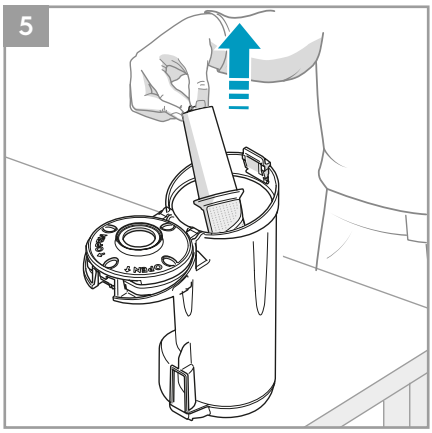
5

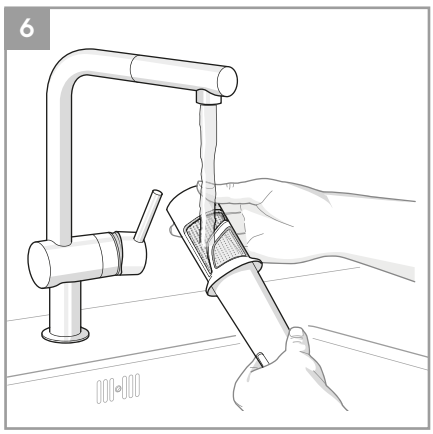
6

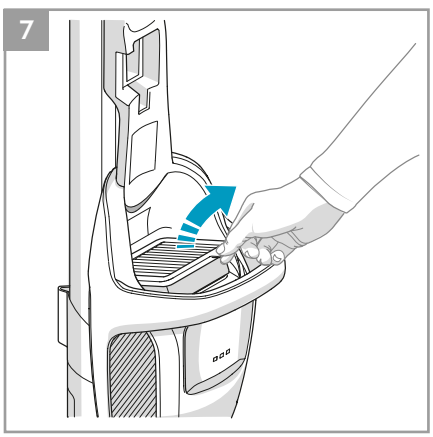
7

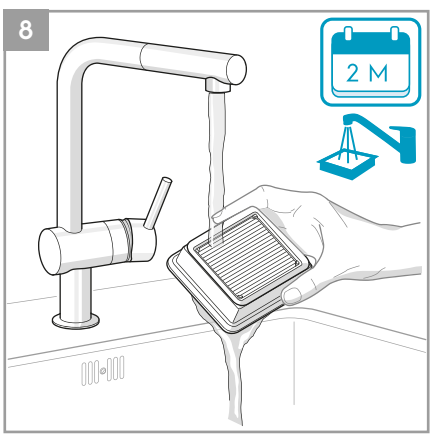
8
2 M

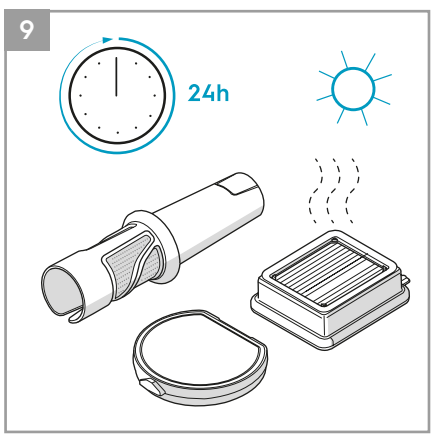
9
24h

8

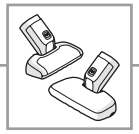

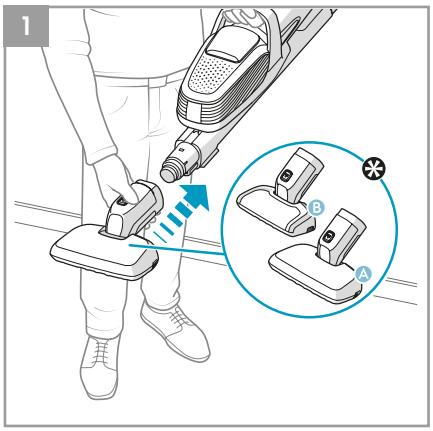



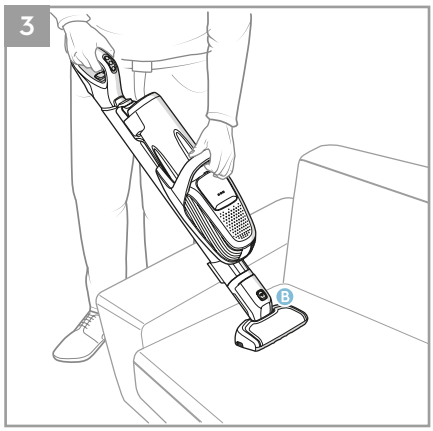

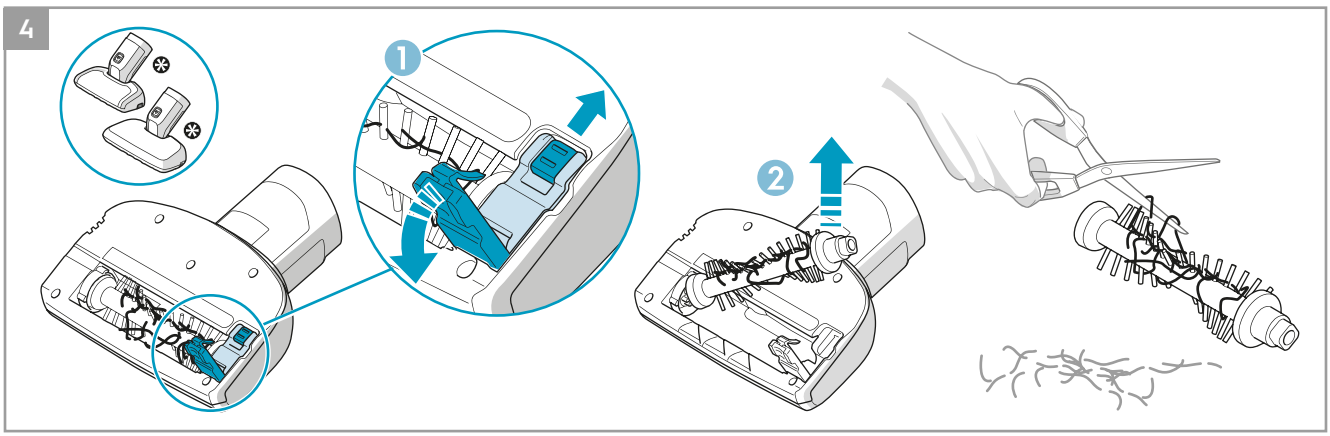

9



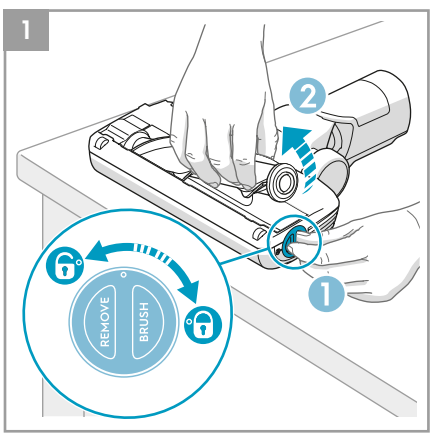

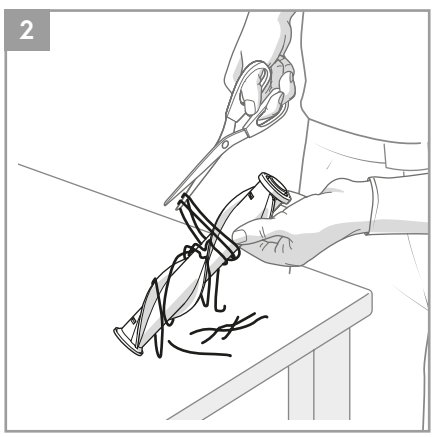

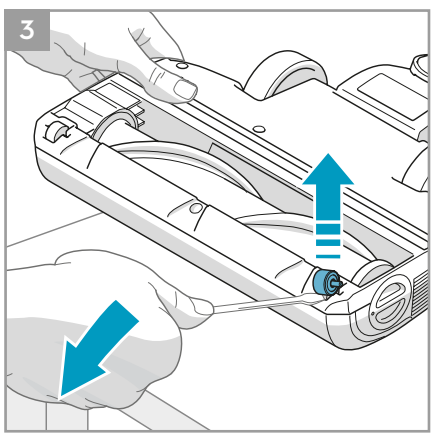

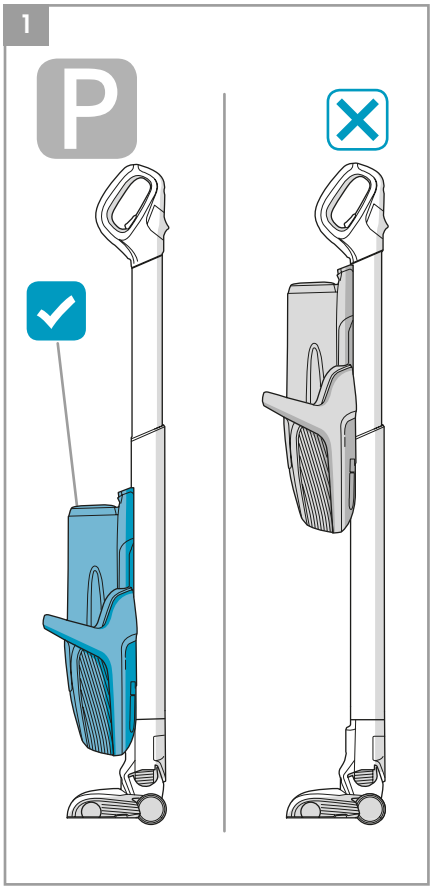
1
P

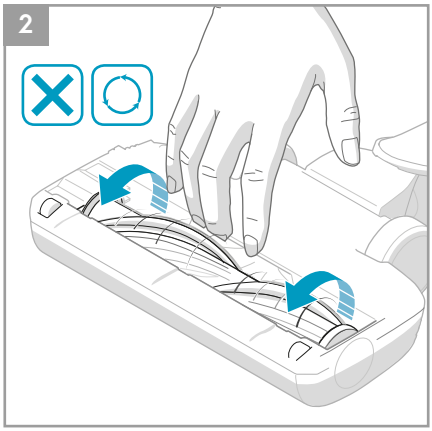
2

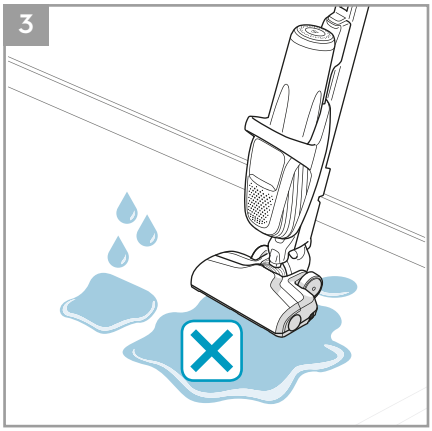
3

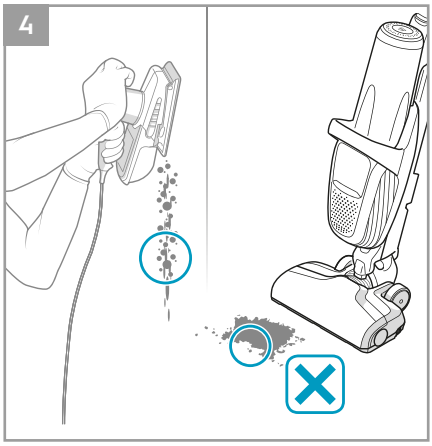
4

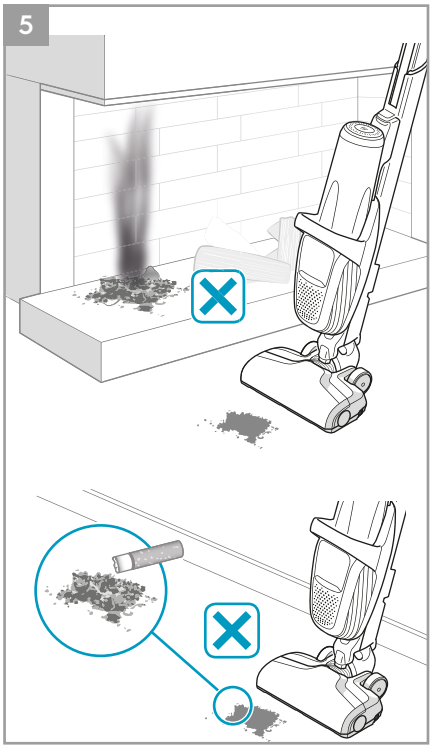
5

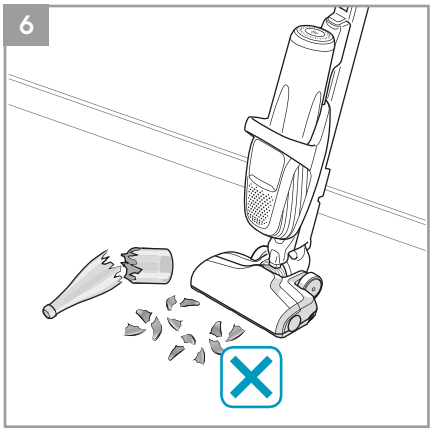
6

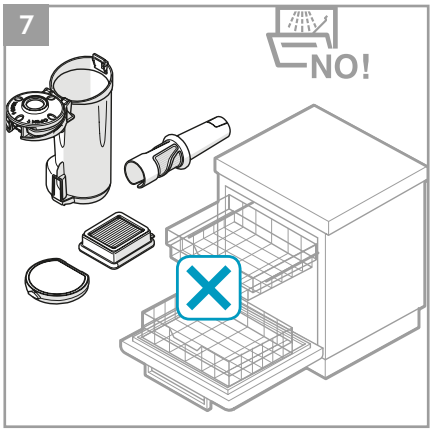
7
NO!

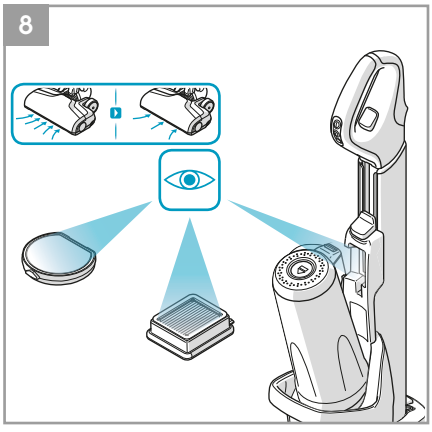
8



KW2370201