Instructions for use

KitchenAid

Installation diagrams 4

Important safety instructions 6

Safeguarding the environment 9

Eco Design Declaration 9

Before use 9

Using existing pots and pans 10

Recommended pan base diameters 10

Installation 10

Electrical wiring 11

Instructions for use 12

Cleaning 16

Troubleshooting 16

After-sales service 17

Power setting table 18

Functions table 19

Cooking table 20

Installation diagrams

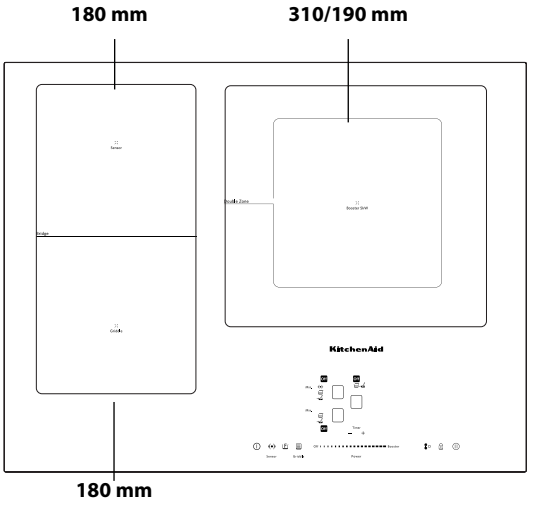

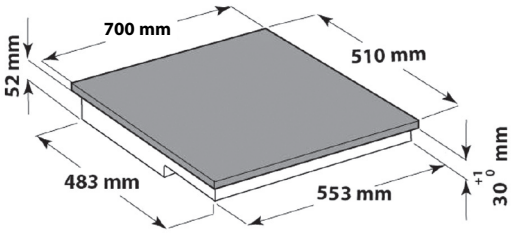

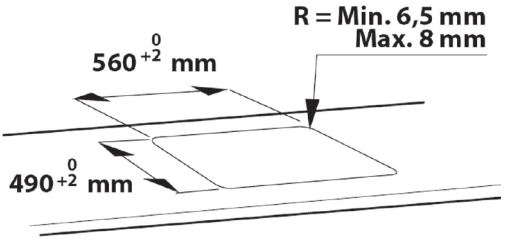

MODEL KHIP3 65510

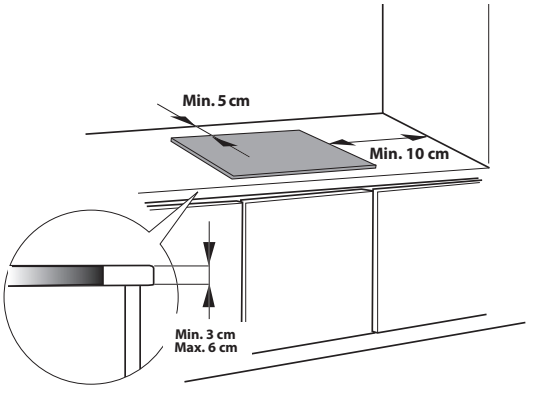

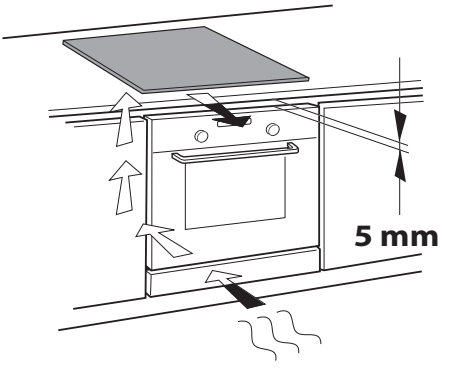

Installation diagrams

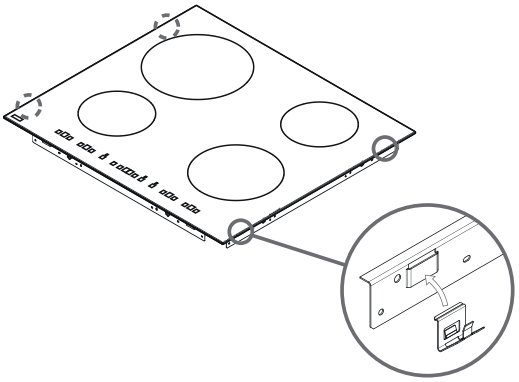

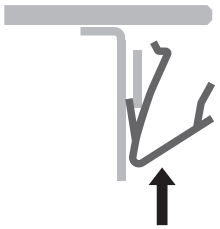

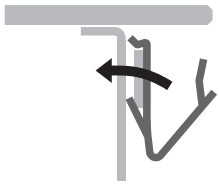

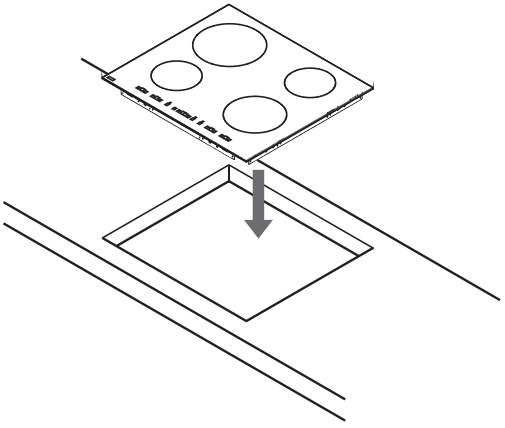

IMPORTANT SAFETY INSTRUCTIONS

YOUR SAFETY AND THAT OF OTHERS IS VERY IMPORTANT

This manual and the appliance itself provide important safety warnings which you should read and observe at all times.



This is the hazard symbol, which warns of potential safety risks to users and others.
All safety information is preceded by the hazard symbol and the following words:

⚠ DANGER — **Indicates a hazardous situation which, if not avoided, will result in serious injury.**

⚠ WARNING — **Indicates a hazardous situation which, if not avoided, could cause serious injury.**

All safety warnings specify the potential risk to which they refer and indicate how to reduce the risk of injury, damage and electric shocks caused by incorrect use of the appliance.
Observe the following instructions at all times:

- Wear protective gloves when unpacking and installing the appliance.
- The appliance must be disconnected from the power supply before installation.
- Installation and repairs must be carried out by a qualified technician in compliance with the manufacturer's instructions and local safety regulations. Do not repair or replace any part of the appliance unless specifically stated in the user manual.
- The appliance must be earthed.
- The power cable must be long enough to connect the appliance to the mains power supply once fitted in its housing.
- For installation to comply with current safety regulations, an omnipolar switch with a minimum contact gap of 3 mm is required.
- Do not use multi-socket adapters or extension leads.
- Do not pull on the appliance's power supply cable.
- The user must not be able to access the electrical components after installation.

- The appliance is designed solely for cooking food in a domestic environment.
  No other use is permitted (e.g. heating rooms). The manufacturer cannot be held responsible for inappropriate use or incorrect setting of the controls.
- The appliance and its accessible parts become hot during use. Care should be taken to avoid touching the heating elements. Infants (0-3 years) and young children (3-8 years) should be kept away from the appliance unless continuously supervised.
- This appliance must not be used by children aged 8 and over or by persons with reduced physical, sensory or mental capabilities or lack of experience and knowledge unless they are supervised or have been given instructions on how to use the appliance safely and understand the hazards involved. Do not let children play with the appliance. Do not let children use, clean or perform maintenance on the appliance without supervision.
- Do not touch the heating elements in the appliance during or after use. Do not allow the appliance to come into contact with cloths or other flammable materials until all the components have cooled down completely.
- Do not place flammable materials on or near the appliance.
- Oils and fats can easily catch fire if they overheat. Pay attention when cooking food that has a high fat or oil content.
- A separator panel (not supplied) must be installed in the compartment under the appliance.
- If the surface of the hob cracks, switch off the appliance to avoid the possibility of electric shock (only applies to hobs with a glass surface).
- The appliance is not intended to be operated by means of an external timer or a separate remote control system.
- Leaving food high in fat or oil unattended while cooking can be dangerous and may result in fire. NEVER try to extinguish a fire with water – switch off the appliance and then cover flame, e.g. with a lid or a fire blanket.
  Risk of fire: Do not leave items on the cooking surfaces.

- Do not use steam cleaners.
- Metallic objects such as knives, forks, spoons and lids should not be placed on the surface of the hob as they can become hot.
- After using the hob, switch off the element using its control and do not rely on the pan detector (only applies to hobs with a glass surface).

Disposing of household appliances

- This product is made from recyclable or reusable materials. It must be disposed of in accordance with local regulations for waste disposal. Cut off the power supply cable before sending the appliance for scrap.
- For further information on the treatment, recovery and recycling of household electrical appliances, contact your competent local authority, the collection service for household waste or the shop where you purchased the product.

Safeguarding the environment

Disposing of packaging materials
The packaging materials are fully recyclable and marked with the recycling symbol ( ). Dispose of the various packaging materials responsibly and in full compliance with your local authority's regulations on waste disposal.

Scrapping
This appliance is marked in compliance with European Directive 2012/19/EU on Waste Electrical and Electronic Equipment (WEEE).
By ensuring that this product is disposed of correctly, you will help to prevent any negative consequences for the environment and human health which could otherwise arise.

The symbol on the appliance or accompanying documentation indicates that this product should not be disposed of as unsorted municipal waste, but must be taken to a collection point for the treatment of WEEE.

Energy saving tips
Follow the following recommendations for optimum results:

- Use pots and pans that have the same base diameter as the cooking zone you are using.
- Only use pots and pans that have a flat base.
- If possible, keep the lids on pots and pans while cooking.
- Cook vegetables, potatoes, etc. with little water in order to reduce the cooking time.
- Use a pressure cooker to save even more energy and time (cannot be used in "SENSOR" mode).
- Make sure you place the pot or pan in the centre of the cooking zone outlined on the hob.

Eco Design Declaration

This appliance meets the Ecodesign requirements of European Regulation No. 66/2014 and complies with the European Standard EN 60350-2.

Before use

IMPORTANT: The cooking zones will not switch on if the pot or pan placed on them does not have the correct dimensions. Only use pots marked with the "INDUCTION SYSTEM" symbol (see picture opposite). Place the pot or pan on the cooking zone you want to use before switching on the hob.



Using existing pots and pans

Use a magnet to check whether your pots and pans are suitable for using on the induction hob: If the magnet does not stick to the item's base, it will not work on the hob.
- Make sure that pots and pans have a smooth base, otherwise they may scratch the glass ceramic surface of the hob. Check dishes as well.
- Never place hot pots or pans on the hob's control panel as they may damage it.

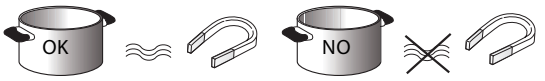

Recommended pan base diameters

XL dia. 30 cm	dia. 14 cm - 30 cm	M dia. 18 cm	dia. 14 cm - 18 cm

IMPORTANT: Refer to the "SENSOR" section for information on the correct pan base diameters for cooking zones with the SENSOR function.
If adapter plates (not provided) are used or a pan is empty, the internal temperature of the system will exceed the set limit and the power supply to the hob will be switched off.
This happens to protect the internal components from overloading.
We recommend switching off the hob and allowing the cooking zone to cool down to the temperature at which the indicators on the control panel switch off.

Installation

After unpacking the hob, check that it has not been damaged during transit. If in doubt, contact your dealer or our after-sales service.



PREPARING THE HOUSING UNIT

⚠ **WARNING**
- **Install a separator panel under the hob.**
- **The lower part of the product must not be accessible after installation.**
- **If there is an oven beneath the hob, do not install the separator panel.**

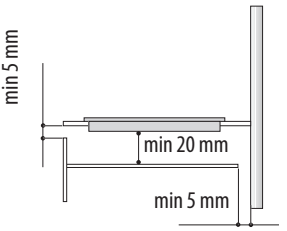

- Observe the clearances between the underside of the appliance and the separator panel below it given in the figure.
- Failure to observe the minimum clearance between the hob and the top of the unit may prevent the product from working correctly.
- Cut the worktop to size before installing the hob and carefully remove any shavings or sawdust.
- If installing an oven underneath the hob, make sure that the oven has a cooling system.
- Do not install the hob above a dishwasher or washing machine, as its electronic circuitry could become damaged by steam and humidity.

Electrical wiring

⚠ **WARNING**

- **Disconnect the appliance from the power supply.**
- **Installation must be carried out by a qualified electrician who is fully aware of current safety and installation regulations.**
- **The manufacturer cannot be held responsible for injury to persons or animals and for damage to property resulting from failure to observe the regulations provided in this section.**
- **The power supply cable must be long enough to allow the hob to be removed from the worktop.**
- **Make sure the voltage specified on the appliance's rating plate is the same as that of the domestic electricity supply.**
- **Do not use extension leads.**

Connecting to the terminal board

Use an H05RR-F cable as indicated in the table below for the electrical wiring.

Wires	**Quantity x size**
220-240 V ~ + ⏚	3 x 4 mm²
220-240 V 3 ~ + ⏚	5 x 1.5 mm²
380-415 V 3N ~ + ⏚	5 x 1.5 mm²
380-415 ~ + ⏚	4 x 1.5 mm²

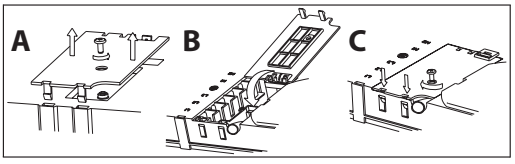

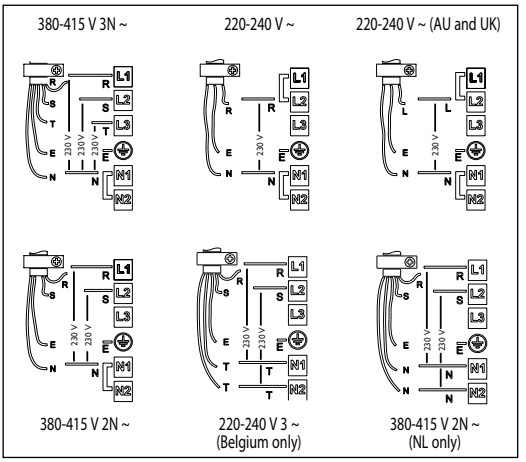

Connect the yellow/green earth wire to the terminal with the ⏚ symbol.
This wire must be longer than the other wires.

1. Remove the terminal block cover (**A**) by undoing the screw and inserting the cover in the terminal block hinge (**B**).
2. Strip approx. 70 mm of sheathing from the power supply cable.
3. Strip approx. 10 mm of sheathing from the wires. Insert the power supply cable into the cable clamp and connect the wires to the terminal board as shown in the diagram next to the terminal board.
4. Secure the power supply cable with the cable clamp.
5. Close the cover (**C**) and screw it on the terminal block using the screw you removed before - point (1).

Every time the hob is connected to the mains, it will carry out an automatic check which takes several seconds.
If the hob already has a power supply cable, follow the instructions accompanying the cable. Connect the appliance to the mains electricity supply using a multi-pole disconnector with a minimum contact gap of 3 mm.

Instructions for use

Description of the control panel

The control panel is equipped with touch controls that can be operated simply by pressing the corresponding symbol (a light touch is sufficient).

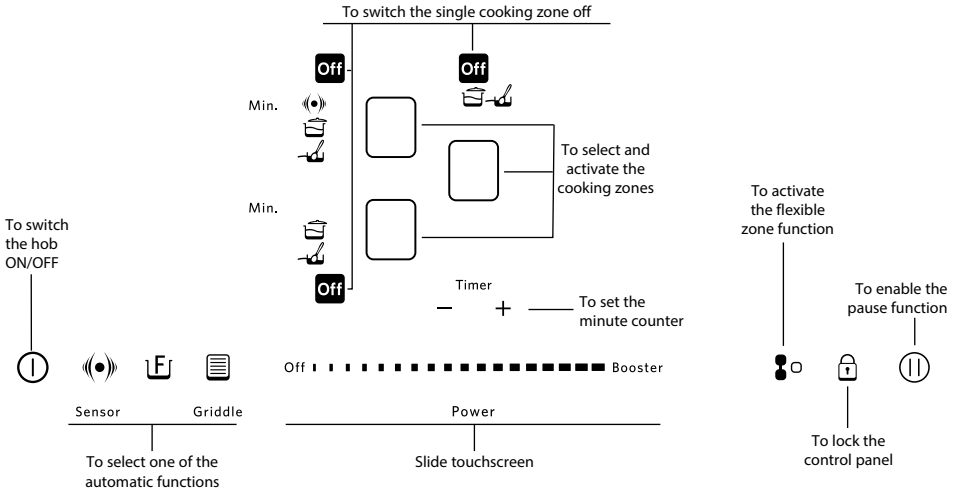

First use/after a power failure

After connecting the hob to the electricity supply, the control panel is locked (the indicator light above the button will be lit).
To unlock the control panel, press and hold the button for 3 seconds. The indicator light will switch off and the hob can be used normally.

Switching the hob on/off

To switch on the hob, press and hold the button for about 2 seconds: The indicator light above the button will light up and hyphens will appear inside the cooking zone circles.
To switch off the hob, press and hold the same button until the hob switches off. All the cooking zones will be deactivated.

Switching the single cooking zone off

To switch off the single cooking zone, press the Off button.

The hob will switch off automatically if no function is selected within 10 seconds of switching it on.

Instructions for use

Activating and adjusting cooking zones

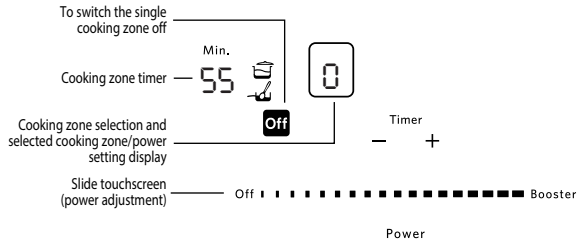

Switch on the hob and then place a pot or pan on the cooking zone you want to use.
Activate the cooking zone by pressing the relevant round button: The round button displays number 0., which corresponds to the intermediate power setting.

U If you are using a pot or pan that is not suitable, not correctly positioned or not of the correct dimensions for your induction hob, the "no pot" message will appear in the display (see figure on the left). If a pot or pan is not detected within 60 seconds, the hob will switch off.

ⓘ When activating the 5 kW zone (if available), make sure to place a pan of the correct size on that zone at least one minute before switching on any other cooking zone. Failure to do so could result in the hob switching off after a short period of time, meaning that each zone will then need to be reactivated. The hob may also switch off if the pan on the 5 kW zone is removed and another cooking zone is switched on at the same time.

0. To change the power setting, move your finger horizontally along the slide touchscreen: The number inside the circle will change from a minimum of 1 to a maximum of 9 depending on the position of your finger on the touchscreen. The booster function can be activated by pressing "BOOST" on the slide touchscreen ("P" on the display). The "BOOST" power setting can be used for up to 10 minutes, after which the appliance will switch to setting 9 automatically. If more than one cooking zone is switched on, the slide touchscreen allows you to change the power of the selected zone, which is indicated by the dot lighting up at the bottom right of the power indicator. To select a zone, simply press the relevant round button.

ⓘ In models with three cooking zones, it is possible activate three "BOOST" functions at the same time: In this case, the appliance will adjust the distribution of power between the zones automatically.

Deactivating cooking zones
Select the cooking zone you want to switch off by pressing the relevant round button (the dot will light up at the bottom right of the power setting indicator). Press OFF on the slide touchscreen.

H The cooking zone will switch off and, if the zone is still hot, the letter "H" will appear in the circle. "H" is the residual heat indicator. The hob has a residual heat indicator for each cooking zone. These indicators alert the user to the fact that cooking zones are still hot. Once the relevant cooking zone has cooled down, the indicator will switch off.

Setting the timer
The timer can be used to set a maximum cooking time of 90 minutes.
Select the cooking zone you want to use with the timer (the dot will light up at the bottom right of the power setting indicator on the display), then set the time you require using the + and - buttons for the timer function: The time in minutes is shown next to the cooking zone display.
A few seconds after the last press, the timer will begin the countdown (the cooking zone selection dot will start flashing).
Once the time you have set has elapsed, a signal will sound and the cooking zone will switch off automatically.

For information on the timer associated with the SENSOR function, refer to the description of the function on the following pages.

Control panel lock
This function locks the hob controls to prevent them from being activated accidentally (e.g. during cleaning).
Press and hold the button for 3 seconds: A signal will sound and an indicator light will switch on above the lock symbol to confirm that the function has been activated. The control panel is locked with the exception of the OFF function. To unlock the controls, repeat the activation procedure. The dot will go out and the hob will be reactivated.

IMPORTANT: Water, liquid spilled from pans or objects resting on the button below the symbol can accidentally activate or deactivate the control panel lock.

Pause
This function allows you to temporarily pause and then resume cooking with the previous settings (except for the SENSOR function and timer setting). Press the button: will starting flashing on the display instead of the power settings. To resume cooking, press the button again.

Flexible zone
This function allows you to use two cooking zones as an extra-large single zone. It is perfect for oval, rectangular and elongated pans (with maximum base dimensions of 40x18 cm). Switch on the hob and press the button: The two cooking zone displays will show the setting "0". The two dots next to the setting number will be lit, indicating that you have selected to merge the two cooking zones into a single zone. To change the power setting, slide your finger along the touchscreen: The number inside the circle will change simply by sliding your finger from a minimum of 1 to a maximum of 9.
To deactivate the flexible zone function, press the button: The two cooking zones will go back to operating separately. Press OFF to switch off the cooking zone.

The booster power setting and SENSOR function cannot be used when the flexible zone function is in use. If you are using the timer, the time will appear next to the display for the highest cooking zone.

Description of the automatic functions
The hob features automatic functions for each cooking zone. The symbols of the available functions are shown next to the selection button for each cooking zone. When an automatic function is selected, an indicator light will switch on next to the symbol and the letter "A" will appear in the cooking zone display.

SENSOR
The SENSOR function automatically selects the ideal power setting for bringing water to the boil and signals boiling point.
Place the pan containing water on the zone displaying the word SENSOR, then switch on the hob and select the zone. Press the button: "A" will appear on the display and the indicator light will switch on. An animation will be displayed in the area next to the zone as it heats up.

To ensure that the SENSOR function works correctly, we recommend that you:
- Only use water (at ambient temperature)
- Do not add salt, ingredients or seasoning before boiling point has been reached
- Do not change the zone's power setting, or remove or move the pan
- Use pots and pans with a base diameter of no more than 1 cm larger or smaller than the outline printed on the glass
- Fill the pan at least 1/3 full (approx. 1 litre) and never to the brim (max. 5 litres for the 180 mm zone and max. 7 litres for the 240 mm zone)
- Do not use pressure cookers.

Instructions for use

Also follow the following recommendations for optimum results:
- Do not put the lid on a pan if it is being used with the SENSOR function
- Do not activate the SENSOR function if the zone is still hot (indicated by the letter "H" on the display).

A signal will sound once boiling point has been reached. The signal will sound three times at regular intervals. After the second signal, a minute counter will automatically start counting the boiling time. After the third signal, the hob will automatically select a lower power setting that is suitable for maintaining the boil. You can now add your ingredients, set the timer or change the power setting. Changing the power setting or activating the pause function will deactivate the SENSOR function.
- The hob manages the SENSOR function and booster settings autonomously; this means that, in some cases, it may not be possible to activate the booster if the SENSOR function is already in use.
- The quality of the cookware you use may affect the performance of the SENSOR function.

Multifunction button
This button allows you to select the simmering, melting or keep warm function with a specific cooking zone.
Select the zone and then press the button; the indicator next to the special function symbols for each cooking zone will indicate the automatic function selected. Press the button repeatedly to set the function you require.

Simmering
Bring the water to the boil, then press the relevant button to select the simmering function . An appropriate power setting will be set automatically to keep it just under the boil. To deactivate the function, simply press OFF on the slide touchscreen.

Melting
This function maintains a permanently low temperature in the cooking zone. Place the pan/accessory on the cooking zone you want to use, switch on the hob and select the cooking zone. Press the button to select the function. To deactivate the function, simply press OFF on the slide touchscreen.

GRIDDLE
This function allows you to grill various types of food using the specific accessory.

ⓘ Only use the accessory supplied.
The use of any other accessory may compromise the performance of the function.
Place the accessory on the cooking zone displaying the word "GRIDDLE". Press the button; an indicator light will switch on above the button and the letter “A” will appear on the display.
When the hob has almost finished heating the accessory, a beep will sound three times every 30 seconds. You can now place the food in the pan. After the second beep, a minute counter will start to time how long the accessory has been at the ideal temperature.

ⓘ When the GRIDDLE function is in use, the flexible zone and booster functions cannot be activated on the same cooking zone.

Cleaning

⚠ **WARNING**

- **Never use steam cleaners.**
- **Before cleaning, make sure that the cooking zones are switched off and the residual heat indicator ("H") is not displayed.**

IMPORTANT: Do not use abrasive sponges or pan scourers as these could damage the surface of the glass.

- Clean the hob after every use (wait until it has cooled down first) to remove any food residues.
- Sugar and foods with a high sugar content may damage the glass ceramic surface and must be removed immediately.
- Salt, sugar and sand can scratch the surface of the glass.
- Use a soft cloth, absorbent kitchen towel or a specific hob cleaner (follow the manufacturer's instructions).

Troubleshooting

- Read and follow the instructions given in the "Instructions for use" section.
- Connect the hob to the electricity supply and check that the supply has not been cut off.
- Clean the hob and dry it thoroughly.
- If you are unable to switch off the hob after using it, disconnect it from the power supply.
- If alphanumeric codes appear on the display when the hob is switched on, consult the following table for instructions.

FAULT CODE	DESCRIPTION	POSSIBLE CAUSES	REMEDY
The hob switches off and, after 30 seconds, a signal sounds every 10 seconds.	Continuous pressure on the control panel area.	Water or utensils on the control panel.	Clean the control panel.
C81, C82, C83	The control panel has switched off because of excessively high temperatures.	The internal temperature of the electronic components is too high.	Wait for the hob to cool down before using it again.
F42 or F43	The connection voltage is incorrect.	The sensor has detected a discrepancy between the appliance voltage and that of the mains supply.	Disconnect the hob from the mains and check the electrical connection.
F12, F21, F25, F36, F37, F40, F47, F56, F58, F60, F61, F62, F63, F64	Call our after-sales service and state the error code.		

After-sales service

Before contacting our after-sales service

1. See if you can solve the problem yourself by referring to the "Troubleshooting" section.
2. Switch the hob off and on again to see if the problem persists.

If the fault persists after you have carried out the checks listed above, contact your nearest after-sales service.

Always provide:

- A brief description of the fault
- The type of product and the exact model
- The service number (the number after the word “Service” on the rating plate) on the underside of the appliance (on the metal plate). The service number is also given in the warranty booklet.
- Your full address
- Your telephone number and area code



If repairs are required, please contact an authorised **after-sales service** (to guarantee that original spare parts will be used and that repairs will be carried out correctly). Replacement parts are available for 10 years.

Power setting table

Power setting		Type of cooking	Setting use (cooking type and habits)
Max. power	**Boost**	Heating quickly	Ideal for rapidly increasing the temperature of food or cooking liquids and boiling water quickly.
	8-9	Frying, boiling	Ideal for browning, starting to cook, frying frozen products, rapid boiling.
High power	**7-8**	Browning, sautéing, boiling	Ideal for sautéing, maintaining a vigorous boil, cooking (for a short period of time, e.g. 5-10 minutes).
	6-7	Browning, cooking, stewing, sautéing	Ideal for sautéing, maintaining a moderate boil, cooking and grilling (for a medium period of time, e.g. 10-20 minutes), preheating accessories.
	4-5	Cooking, stewing, sautéing	Ideal for stewing, maintaining a gentle boil, cooking (for a long period of time) and creaming pasta.
Medium power	**3-4**	Cooking, simmering, thickening, creaming pasta	Ideal for recipes with a long cooking time (rice, sauces, roasts, fish), with liquids (e.g. water, wine, broth, milk) or for creaming pasta.
	2-3		Ideal for recipes with a long cooking time (quantities under 1 litre: rice, sauces, roasts, fish) and with liquids (e.g. water, wine, broth, milk).
Low power	**1-2**	Melting, thawing	Ideal for softening butter, gently melting chocolate or thawing small products.
	1	Keeping food warm Creaming risotto	Ideal for keeping small portions of just-cooked food or serving dishes warm and for creaming risotto.
OFF	**Zero power**	Support surface	Hob in standby mode or off (possible residual heat from cooking, indicated by an "H").

Functions table

Function		Description of the automatic functions
	Simmering	Identifies a power setting that is suitable for simmering in recipes with a long cooking time. Suitable for cooking tomato sauce, ragù, soups, minestrone, maintaining a constant cooking level. Ideal for cooking in a bain-marie (creamy sauces) and reheating food that has already been cooked. Prevents food from boiling over or sticking to the bottom of the pan and burning, as often happens with these recipes. Use this function after bringing the food to the boil.
	Melting	Identifies a power setting that is suitable for slowly melting delicate products without affecting their texture (e.g. chocolate, butter).
	Sensor	Automatically senses when water reaches the boiling point and reduces the power to maintain the boil until the food is added. When the water reaches the boiling point, a signal will sound to indicate that you can add your ingredients (e.g. seasoning, pasta, rice, vegetables, meat, fish). Also suitable for making homemade preserves and sterilising accessories.
	Flexible zone	This function combines two cooking zones to create an extra-large cooking surface for rectangular and oval containers or grill pans. For grilling large items of food or multiple items at the same time (e.g. fish, kebabs, vegetables, steaks, sausages). For recipes with liquids or broth, such as roulades and whole fish in casseroles/fish kettles/pans.
	Griddle	Designed to be used exclusively with the accessory supplied. This function automatically identifies a power setting that is ideal for grilling various types of food. Wait until the function signals that the accessory is preheated to the correct temperature before placing food on it. The accessory supplied provides uniform heat distribution that ensures perfect grilling of any type of food, e.g. meat, fish, vegetables, kebabs, steaks, hamburgers, slices of fish, sausages, cheese.

Cooking table

Type(s) of food	Dish(es) or type of Cooking	Power setting and cooking status			
		First stage	Power	Second stage	Power
Pasta and rice	Fresh pasta	Heating the water	Booster - 9	Cooking the pasta and maintaining the boil	7-8
	Dry pasta	Heating the water	Booster - 9	Cooking the pasta and maintaining the boil	7-8
	Boiled rice	Heating the water	Booster - 9	Cooking the rice and maintaining the boil	5-6
	Risotto	Sautéing and roasting	7-8	Maintaining the right cooking temperature	4-5
Vegetables Pulses	Boiled	Heating the water	Booster - 9	Cooking	6-7
	Fried	Heating the oil	9	Frying	8-9
	Sautéed	Heating the accessory	7-8	Cooking the food	6-7
	Stewed	Heating the accessory	7-8	Cooking and maintaining the temperature	3-4
	Browned	Heating the accessory	7-8	Browning the soffritto	7-8
Meat	Roasted	Browning the meat with oil (or power setting 6 if using butter)	7-8	Cooking	3-4
	Grilled	Preheating the pan	7-8	Grilling on both sides	7-8
	Browned	Browning with oil (or power setting 6 if using butter)	7-8	Cooking	4-5
	Stewed	Browning with oil (or power setting 6 if using butter)	7-8	Cooking and maintaining the temperature	3-4

Cooking table

Type(s) of food	Dish(es) or type of Cooking	Power setting and cooking status			
		First stage	Power	Second stage	Power
Fish	Grilled	Preheating the grill	7-8	Cooking on both sides	7-8
	Stewed	Browning with oil (or power setting 6 if using butter)	7-8	Cooking and maintaining the temperature	3-4
	Fried	Heating the oil or fat	8-9	Frying or browning	7-8
Eggs	Frittata	Heating the pan with butter or fat	6	Cooking on both sides	6-7
	Omelettes	Heating the pan with butter or fat	6	Cooking	5-6
	Soft/hard-boiled	Heating the water	Booster - 9	Cooking	5-6
	Pancakes	Heating the pan with butter	6	Cooking on both sides	5-6
Sauces	Tomato	Browning with oil (or power setting 6 if using butter)	6-7	Cooking	3-4
	Ragù	Browning with oil (or power setting 6 if using butter)	6-7	Cooking, maintaining a moderate boil	3-4
	Béchamel	Preparing the base (melting butter and adding flour)	5-6	Bringing to and maintaining a gentle boil	3-4
Desserts Cream products	Pastry cream	Bringing the milk to the boil	4-5	Bringing to the required consistency	4-5
	Puddings	Bringing the milk to the boil	4-5	Bringing to the required consistency	2-3
	Rice pudding	Heating the milk	5-6	Cooking	2-3



FOR THE WAY IT'S MADE.

Whirlpool Europe S.r.l. - Socio Unico
Viale G. Borghi, 27 - 21025 Comerio (VA), Italy
Tel. +39 0332 759111 - Fax +39 0332 759268
www.whirlpool.eu

Printed in Italy
05/16

400010887265