ideapad MIIX 510-12ISK Hardware Maintenance Manual

Lenovo™

Note:

Before using this information and the product it supports, be sure to read the general information under “Notices” on page 66.

First Edition (September. 2016)

© Copyright Lenovo 2016. All rights reserved.

LIMITED AND RESTRICTED RIGHTS NOTICE: If data or software is delivered pursuant a General Services Administration “GSA” contract, use, reproduction, or disclosure is subject to restrictions set forth in Contract No. GS-35F-05925.

© 2016 Lenovo

Contents

About this manual iv

Safety information 1
General safety 2
Electrical safety 3
Safety inspection guide 5
Handling devices that are sensitive to electrostatic discharge 6
Grounding requirements 6
Safety notices: multilingual translations 7
Laser compliance statement 14

Important service information 16
Strategy for replacing FRUs 16
Important notice for replacing a system board 17
Important information about replacing RoHS compliant FRUs 18

General checkout 19
What to do first 20
Power system checkout 21
Checking the AC adapter 21
Checking operational charging 21

Related service information 23
Restoring the factory contents by using Recovery system 23
Restore of factory default 23
Passwords 23
Power-on password 23
Supervisor password 24
Power management 24
Screen blank mode 24
Putting the computer to sleep or shutting it down 24
Putting your computer to sleep 24
Shutting down the computer 25

Lenovo ideapad MIIX 510-12ISK 26
Specifications 26
Hotkeys 28
FRU replacement notices 29
Screw notices 29
Removing and replacing an FRU 30
1010 LCD cover 31
1020 Battery pack 33
1030 PCI Express Mini Card for wireless LAN 35
1040 SSD card and LTE card 37
1050 Fan assembly and Heat Sink assembly 39
1060 Audio Board 42
1070 System board 44
1080 Speakers 47
1090 SIM card board 48
1100 Integrated camera 50
1110 Antenna Module 51
1120 Stand Cover 52
Locations 56
Front view 56
Left-side view 56
Right-side view 56
Top View 57
Bottom view 57
Rear view 57
Keyboard folio top view 57
Parts list 58
Overall 59
Keyboard 62
Miscellaneous parts 64
Screws 65
Active Pen 65

Notices 66
Trademarks 67

About this manual

This manual contains service and reference information for the following Lenovo ideapad product:

Lenovo ideapad MIIX 510-12ISK

Use this manual to troubleshoot problems.

The manual is divided into the following sections:

- The common sections provide general information, guidelines, and safety information required for servicing computers.
- The product-specific section includes service, reference, and product-specific parts information.

Important:

This manual is intended only for trained servicers who are familiar with Lenovo ideapad products. Use this manual to troubleshoot problems effectively.

Before servicing a Lenovo ideapad product, make sure to read all the information under “Safety information” on page 1 and “Important service information” on page 16.

Safety information

This chapter presents the following safety information that you need to get familiar with before you service an Lenovo ideapad MIIX 510-12ISK computer:

- “General safety” on page 2
- “Electrical safety” on page 3
- “Safety inspection guide” on page 5
- “Handling devices that are sensitive to electrostatic discharge” on page 6
- “Grounding requirements” on page 6
- “Safety notices: multilingual translations” on page 7
- “Laser compliance statement” on page 14

General safety

Follow these rules below to ensure general safety:

- Observe a good housekeeping in the area where the machines are put during and after the maintenance.
- When lifting any heavy object:
  1. Make sure that you can stand safely without slipping.
  2. Distribute the weight of the object equally between your feet.
  3. Use a slow lifting force. Never move suddenly or twist when you attempt to lift it.
  4. Lift it by standing or pushing up with your leg muscles; this action could avoid the strain from the muscles in your back. Do not attempt to lift any object that weighs more than 16 kg (35 lb) or that you think is too heavy for you.
- Do not perform any action that causes hazards to the customer, or that makes the machine unsafe.
- Before you start the machine, make sure that other service representatives and the customer are not in a hazardous position.
- Place removed covers and other parts in a safe place, keeping them away from all personnel, while you are servicing the machine.
- Keep your toolcase away from walk areas so that other people will not trip it over.
- Do not wear loose clothing that can be trapped in the moving parts of the machine. Make sure that your sleeves are fastened or rolled up above your elbows. If your hair is long, fasten it.
- Insert the ends of your necktie or scarf inside clothing or fasten it with the nonconductive clip, about 8 centimeters (3 inches) from the end.
- Do not wear jewelry, chains, metal-frame eyeglasses, or metal fasteners for your clothing.

  Attention: Metal objects are good electrical conductors.
- Wear safety glasses when you are hammering, drilling, soldering, cutting wire, attaching springs, using solvents, or working in any other conditions that may be hazardous to your eyes.
- After service, reinstall all safety shields, guards, labels, and ground wires. Replace any safety device that is worn or defective.
- Reinstall all covers correctly before returning the machine to the customer.
- Fan louvers on the machine help to prevent the overheating of internal components. Do not obstruct fan louvers or cover them with labels or stickers.

Electrical safety

Observe the following rules when working on electrical equipments.

Important:

Use only approved tools and test equipments. Some hand tools have handles covered with a soft material that does not insulate you when working with live electrical currents.

Many customers have rubber floor mats near their machines that contain small conductive fibers to decrease electrostatic discharges. Do not use such kind of mat to protect yourself from electrical shock.

- Find the room emergency power-off (EPO) switch, disconnecting the switch or electrical outlet. If an electrical accident occurs, you can then operate the switch or unplug the power cord quickly.
- Do not work alone under hazardous conditions or near the equipment that has hazardous voltages.
- Disconnect all power before:
  - Performing a mechanical inspection
  - Working near power supplies
  - Removing or installing main units
- Before you start to work on the machine, unplug the power cord. If you cannot unplug it, ask the customer to power-off the wall box that supplies power to the machine, and to lock the wall box in the off position.
- If you need to work on a machine that has exposed electrical circuits, observe the following precautions:
  - Ensure that another person, familiar with the power-off controls, is near you.

    Attention: Another person must be there to switch off the power, if necessary.
  - Use only one hand when working with powered-on electrical equipment; keep the other hand in your pocket or behind your back.

    Attention: An electrical shock can occur only when there is a complete circuit. By observing the above rule, you may prevent a current from passing through your body.
  - When using testers, set the controls correctly and use the approved probe leads and accessories for that tester.
  - Stand on suitable rubber mats (obtained locally, if necessary) to insulate you from grounds such as metal floor strips and machine frames.

Observe the special safety precautions when you work with very high voltages; instructions for these precautions are in the safety sections of maintenance information. Be extremely careful when you measure the high voltages.

- Regularly inspect and maintain your electrical hand tools for safe operational condition.
- Do not use worn or broken tools and testers.
- Never assume that power has been disconnected from a circuit. First, check it to make sure that it has been powered off.

- Always look carefully for possible hazards in your work area. Examples of these hazards are moist floors, nongrounded power extension cables, power surges, and missing safety grounds.
- Do not touch live electrical circuits with the reflective surface of a plastic dental mirror. The surface is conductive; such touching can cause personal injury and machine damage.
- Do not service the following parts with the power on when they are removed from their normal operating places in a machine:
  - Power supply units
  - Pumps
  - Blowers and fans
  - Motor generators

  and similar units. (This practice ensures correct grounding of the units.)
- If an electrical accident occurs:
  - Caution: do not become a victim yourself.
  - Switch off the power.
  - Send the victim to get medical aid.

Safety inspection guide

The purpose of this inspection guide is to assist you in identifying potential unsafe conditions. As each machine was designed and built, required safety items were installed to protect users and service personnel from injury. This guide addresses only those items. You should use good judgment to identify potential safety hazards according to the attachment of non-Lenovo ideapad features or options not covered by this inspection guide.

If any unsafe conditions are present, you must determine how serious the apparent hazard could be and whether you can continue without first correcting the problem.

Consider these conditions and the safety hazards they present:

- Electrical hazards, especially primary power (primary voltage on the frame can cause serious or fatal electrical shock)
- Explosive hazards, such as a damaged CRT face or a bulging capacitor
- Mechanical hazards, such as loose or missing hardware

To determine whether there are any potential unsafe conditions, use the following checklist at the beginning of every service task. Begin the checks with the power off, and the power cord disconnected.

Checklist:

1. Check exterior covers for damage (loose, broken, or sharp edges).
2. Turn off the computer. Disconnect the power cord.
3. Check the power cord for:
   a. A third-wire ground connector in good condition. Use a meter to measure third-wire ground continuity for 0.1 ohm or less between the external ground pin and the frame ground.
   b. The power cord should be the type specified in the parts list.
   c. Insulation must not be frayed or worn.
4. Check for cracked or bulging batteries.
5. Remove the cover.
6. Check for any obvious non-Lenovo ideapad alterations. Use good judgment as to the safety of any non-Lenovo ideapad alterations.
7. Check inside the unit for any obvious unsafe conditions, such as metal filings, contamination, water or other liquids, or signs of fire or smoke damage.
8. Check for worn, frayed, or pinched cables.
9. Check that the power-supply cover fasteners (screws or rivets) have not been removed or tampered with.

Handling devices that are sensitive to electrostatic discharge

Any computer part containing transistors or integrated circuits (ICs) should be considered sensitive to electrostatic discharge (ESD). ESD damage can occur when there is a difference in charge between objects. Protect against ESD damage by equalizing the charge so that the machine, the part, the work mat, and the person handling the part are all at the same charge.

Notes:

1. Use product-specific ESD procedures when they exceed the requirements noted here.
2. Make sure that the ESD protective devices you use have been certified (ISO 9000) as fully effective.

When handling ESD-sensitive parts:

- Keep the parts in protective packages until they are inserted into the product.
- Avoid contact with other people.
- Wear a grounded wrist strap against your skin to eliminate static on your body.
- Prevent the part from touching your clothing. Most clothing is insulative and retains a charge even when you are wearing a wrist strap.
- Use the black side of a grounded work mat to provide a static-free work surface. The mat is especially useful when handling ESD-sensitive devices.
- Select a grounding system, such as those listed below, to provide protection that meets the specific service requirement.

Note:

The use of a grounding system to guard against ESD damage is desirable but not necessary.

  - Attach the ESD ground clip to any frame ground, ground braid, or green-wire ground.
  - When working on a double-insulated or battery-operated system, use an ESD common ground or reference point. You can use coax or connector-outside shells on these systems.
  - Use the round ground prong of the ac plug on ac-operated computers.

Grounding requirements

Electrical grounding of the computer is required for operator safety and correct system function. Proper grounding of the electrical outlet can be verified by a certified electrician.

Safety notices: multilingual translations

The safety notices in this section are provided in English, French, German, Hebrew, Italian, Japanese, and Spanish.

Safety notice 1

Before the computer is powered on after FRU replacement, make sure all screws, springs, and other small parts are in place and are not left loose inside the computer. Verify this by shaking the computer and listening for rattling sounds. Metallic parts or metal flakes can cause electrical shorts.

Avant de remettre l'ordinateur sous tension après remplacement d'une unité en clientèle, vérifiez que tous les ressorts, vis et autres pièces sont bien en place et bien fixées. Pour ce faire, secouez l'unité et assurez-vous qu'aucun bruit suspect ne se produit. Des pièces métalliques ou des copeaux de métal pourraient causer un court-circuit.

Bevor nach einem FRU-Austausch der Computer wieder angeschlossen wird, muß sichergestellt werden, daß keine Schrauben, Federn oder andere Kleinteile fehlen oder im Gehäuse vergessen wurden. Der Computer muß geschüttelt und auf Klappergeräusche geprüft werden. Metallteile oder-splitter können Kurzschlüsse erzeugen.

לפני הפעלת המחשב לאחר החלפת FRU יש לוודא
שכל הברגים, הקפיצים, וחלקים קטנים אחרים נמצאים
במקומם ואינם חופשיים לזוז בתוך המחשב. כדי לוודא
זאת, יש לטלטל את המחשב ולהקשיב לגילוי קולות שקשוק.
חלקי או שבבי מתכת עלולים לגרום לקצרים חשמליים.

Prima di accendere l'elaboratore dopo che é stata effettuata la sostituzione di una FRU, accertarsi che tutte le viti, le molle e tutte le altri parti di piccole dimensioni siano nella corretta posizione e non siano sparse all'interno dell'elaboratore. Verificare ciò scuotendo l'elaboratore e prestando attenzione ad eventuali rumori; eventuali parti o pezzetti metallici possono provocare cortocircuiti pericolosi.

FRU の交換後、コンピュータの電源を入れる前に、ねじ、バネ、その他の小さな部品がすべて正しい位置にあり、またコンピュータの内部で緩んでいないことを確認してください。
これを確認するには、コンピュータを振って、カチャカチャと音がしないか確かめます。金属部品や金属破片はショートの原因になることがあります。

Antes de encender el sistema despues de sustituir una FRU, compruebe que todos los tornillos, muelles y demás piezas pequeñas se encuentran en su sitio y no se encuentran sueltas dentro del sistema. Compruébelo agitando el sistema y escuchando los posibles ruidos que provocarían. Las piezas metálicas pueden causar cortocircuitos eléctricos.

Safety notice 2

⚠ DANGER

Some standby batteries contain a small amount of nickel and cadmium. Do not disassemble a standby battery, recharge it, throw it into fire or water, or short-circuit it. Dispose of the battery as required by local ordinances or regulations. Use only the battery in the appropriate parts listing. Use of an incorrect battery can result in ignition or explosion of the battery.

Certaines batteries de secours contiennent du nickel et du cadmium. Ne les démontez pas, ne les rechargez pas, ne les exposez ni au feu ni à l'eau. Ne les mettez pas en court-circuit. Pour les mettre au rebut, conformez-vous à la réglementation en vigueur. Lorsque vous remplacez la pile de sauvegarde ou celle de l'horloge temps réel, veillez à n'utiliser que les modèles cités dans la liste de pièces détachées adéquate. Une batterie ou une pile inappropriée risque de prendre feu ou d'exploser.

Die Bereitschaftsbatterie, die sich unter dem Diskettenlaufwerk befindet, kann geringe Mengen Nickel und Cadmium enthalten. Sie darf nicht zerlegt, wiederaufgeladen, kurzgeschlossen, oder Feuer oder Wasser ausgesetzt werden. Bei der Entsorgung die örtlichen Bestimmungen für Sondermüll beachten. Beim Ersetzen der Bereitschafts-oder Systembatterie nur Batterien des Typs verwenden, der in der Ersatzteilliste aufgeführt ist. Der Einsatz falscher Batterien kann zu Entzündung oder Explosion führen.

סוללות המתנה מסוימות מכילות כמות קטנה
של ניקל וקדמיום. אין לפרק סוללת המתנה,
לטעון אותה מחדש, להשליך אותה לאש או
למים או לקצר אותה. יש לסלק את הסוללה
בכדרש על ידי התקנות והחוקים המקומיים. יש
להשתמש רק בסוללה המופיעה ברשימת החלקים
המתאימה. שימוש בסוללה לא מתאימה עלול
לגרום להצתה או התפוצצות של הסוללה.

Alcune batterie di riserva contengono una piccola quantità di nichel e cadmio. Non smontarle, ricaricarle, gettarle nel fuoco o nell'acqua né cortocircuitarle. Smaltirle secondo la normativa in vigore (DPR 915/82, successive disposizioni e disposizioni locali). Quando si sostituisce la batteria dell'RTC (real time clock) o la batteria di supporto, utilizzare soltanto i tipi inseriti nell'appropriato Catalogo parti. L'impiego di una batteria non adatta potrebbe determinare l'incendio o l'esplosione della batteria stessa.

予備バッテリーの中には少量のニッケルとカドミウムが含まれているものがあります。したがって、予備バッテリーの分解、再充電、火または水の中への投棄、またはショートさせることは決して行わないでください。バッテリーを廃棄する場合は地方自治体の条例に従ってください。適切なパーツ・リストにあるバッテリーだけを使用してください。誤ったバッテリーを使用すると、バッテリーが発火したり、爆発したりすることがあります。

Algunas baterías de reserva contienen una pequeña cantidad de níquel y cadmio. No las desmonte, ni recargue, ni las eche al fuego o al agua ni las cortocircuite. Deséchelas tal como dispone la normativa local. Utilice sólo baterías que se encuentren en la lista de piezas. La utilización de una batería no apropiada puede provocar la ignición o explosión de la misma.

Safety notice 3

⚠ DANGER

The battery pack contains small amounts of nickel. Do not disassemble it, throw it into fire or water, or short-circuit it. Dispose of the battery pack as required by local ordinances or regulations. Use only the battery in the appropriate parts listing when replacing the battery pack. Use of an incorrect battery can result in ignition or explosion of the battery.

La batterie contient du nickel. Ne la démontez pas, ne l'exposez ni au feu ni à l'eau. Ne la mettez pas en court-circuit. Pour la mettre au rebut, conformez-vous à la réglementation en vigueur. Lorsque vous remplacez la batterie, veillez à n'utiliser que les modèles cités dans la liste de pièces détachées adéquate. En effet, une batterie inappropriée risque de prendre feu ou d'exploser.

Akkus enthalten geringe Mengen von Nickel. Sie dürfen nicht zerlegt, wiederaufgeladen, kurzgeschlossen, oder Feuer oder Wasser ausgesetzt werden. Bei der Entsorgung die örtlichen Bestimmungen für Sondermüll beachten. Beim Ersetzen der Batterie nur Batterien des Typs verwenden, der in der Ersatzteilliste aufgeführt ist. Der Einsatz falscher Batterien kann zu Entzündung oder Explosion führen.

מארז הסוללה מכיל כמות קטנה של ניקל
וקדמיום. אין לפרק את מארז הסוללה, להשליך
אותו לאש או למים או לקצר אותו. יש לסלק את
מארז הסוללה הסוללה כנדרש על ידי התקנות
והחוקים המקומיים. יש להשתמש רק בסוללה
המופיעה ברשימת החלקים המתאימה בזמן החלפת
מארז הסוללה. שימוש בסוללה לא מתאימה עלול
לגרום להצתה או התפוצצות של הסוללה.

La batteria contiene piccole quantità di nichel. Non smontarla, gettarla nel fuoco o nell'acqua né cortocircuitarla. Smaltirla secondo la normativa in vigore (DPR 915/82, successive disposizioni e disposizioni locali). Quando si sostituisce la batteria, utilizzare soltanto i tipi inseriti nell'appropriato Catalogo parti. L'impiego di una batteria non adatta potrebbe determinare l'incendio o l'esplosione della batteria stessa.

バッテリー・パックには少量のニッケルが含まれています。バッテリー・パックを分解したり、火または水の中に投げ込んだり、ショートさせないでください。バッテリー・パックの廃棄にあたっては、地方自治体の条例または規則に従ってください。バッテリー・パックを交換するときは、適切なパーツ・リストにあるバッテリーだけを使用してください。誤ったバッテリーを使用すると、バッテリーが発火したり、爆発したりすることがあります。

Las baterías contienen pequeñas cantidades de níquel. No las desmonte, ni recargue, ni las eche al fuego o al agua ni las cortocircuite. Deséchelas tal como dispone la normativa local. Utilice sólo baterías que se encuentren en la lista de piezas al sustituir la batería. La utilización de una batería no apropiada puede provocar la ignición o explosión de la misma.

Safety notice 4

⚠ DANGER

The lithium battery can cause a fire, an explosion, or a severe burn. Do not recharge it, remove its polarized connector, disassemble it, heat it above 100°C (212°F), incinerate it, or expose its cell contents to water. Dispose of the battery as required by local ordinances or regulations. Use only the battery in the appropriate parts listing. Use of an incorrect battery can result in ignition or explosion of the battery.

La pile de sauvegarde contient du lithium. Elle présente des risques d'incendie, d'explosion ou de brûlures graves. Ne la rechargez pas, ne retirez pas son connecteur polarisé et ne la démontez pas. Ne l'exposez pas à une temperature supérieure à 100°C, ne la faites pas brûler et n'en exposez pas le contenu à l'eau. Mettez la pile au rebut conformément à la réglementation en vigueur. Une pile inappropriée risque de prendre feu ou d'exploser.

Die Systembatterie ist eine Lithiumbatterie. Sie kann sich entzünden, explodieren oder schwere Verbrennungen hervorrufen. Batterien dieses Typs dürfen nicht aufgeladen, zerlegt, über 100 C erhitzt oder verbrannt werden. Auch darf ihr Inhalt nicht mit Wasser in Verbindung gebracht oder der zur richtigen Polung angebrachte Verbindungsstecker entfernt werden. Bei der Entsorgung die örtlichen Bestimmungen für Sondermüll beachten. Beim Ersetzen der Batterie nur Batterien des Typs verwenden, der in der Ersatzteilliste aufgeführt ist. Der Einsatz falscher Batterien kann zu Entzündung oder Explosion führen.

סוללת הליתיום עלולה לגרום לשריפה, להתפוצצות או לכוויות קשות. אין לטעון אותה מחדש, לסלק את המחבר המקוטב שלה, לפרק אותה או לחמם אותה לטמפרטורה העולה על 100 מעלות צלזיוס. אין לשרוף את הסוללה ואין לחשוף את תוכן התא למים. יש לסלק את הסוללה כנדרש בתקנות ובחוקים המקומיים. יש להשתמש רק בסוללה המופיעה ברשימת החלקים המתאימים. שימוש בסוללה אחרת עלול לגרום לסכנת שריפה או התפוצצות.

La batteria di supporto e una batteria al litio e puo incendiarsi, esplodere o procurare gravi ustioni. Evitare di ricaricarla, smontarne il connettore polarizzato, smontarla, riscaldarla ad una temperatura superiore ai 100 gradi centigradi, incendiarla o gettarla in acqua. Smaltirla secondo la normativa in vigore (DPR 915/82, successive disposizioni e disposizioni locali). L'impiego di una batteria non adatta potrebbe determinare l'incendio o l'esplosione della batteria stessa.

リチウム・バッテリーは、火災、爆発、または重症のやけどを引き起こすことがあります。バックアップ・バッテリーの充電、その極性コネクターの取り外し、バッテリー本体の分解、100 ℃ (212 ˚F) 以上への加熱、焼却、電池の中身を水に浸すことはしないでください。バッテリーを廃棄する場合は地方自治体の条例に従ってください。適切なパーツ・リストにあるバッテリーだけを使用してください。誤ったバッテリーを使用すると、バッテリーが発火したり、爆発したりすることがあります。

La batería de repuesto es una batería de litio y puede provocar incendios, explosiones o quemaduras graves. No la recargue, ni quite el conector polarizado, ni la desmonte, ni caliente por encima de los 100°C (212°F), ni la incinere ni exponga el contenido de sus celdas al agua. Deséchela tal como dispone la normativa local.

Safety notice 5

If the LCD breaks and the fluid from inside the LCD gets into your eyes or on your hands, immediately wash the affected areas with water at least for 15 minutes. Seek medical care if any symptoms caused by the fluid are present after washing.

Si le panneau d'affichage à cristaux liquides se brise et que vous recevez dans les yeux ou sur les mains une partie du fluide, rincez-les abondamment pendant au moins quinze minutes. Consultez un médecin si des symptômes persistent après le lavage.

Die Leuchtstoffröhre im LCD-Bildschirm enthält Quecksilber. Bei der Entsorgung die örtlichen Bestimmungen für Sondermüll beachten. Der LCD-Bildschirm besteht aus Glas und kann zerbrechen, wenn er unsachgemäß behandelt wird oder der Computer auf den Boden fällt. Wenn der Bildschirm beschädigt ist und die darin befindliche Flüssigkeit in Kontakt mit Haut und Augen gerät, sollten die betroffenen Stellen mindestens 15 Minuten mit Wasser abgespült und bei Beschwerden anschließend ein Arzt aufgesucht werden.

אם מסך הגביש הנוזלי (LCD) נשבר והנוזל מתוך המסך בא במגע
עם עיניכם או ידיכם, שטפו את האזורים הנגועים מיד במים במשך
15 דקות לפחות. פנו לקבלת עזרה רפואית אם תסמינים הנובעים
מהמגע עם הנוזל נמשכים לאחר השטיפה.

Nel caso che caso l'LCD si dovesse rompere ed il liquido in esso contenuto entrasse in contatto con gli occhi o le mani, lavare immediatamente le parti interessate con acqua corrente per almeno 15 minuti; poi consultare un medico se i sintomi dovessero permanere.

LCD が破損し、 LCD の中の液体が目に入ったり、手に触れたりした場合は、液体が触れた部分を少なくとも 15 分間洗い流してください。洗い流した後に、液体によって何らかの症状が現れた場合は、医師の治療を受けてください。

Si la LCD se rompe y el fluido de su interior entra en contacto con sus ojos o sus manos, lave inmediatamente las áreas afectadas con agua durante 15 minutos como mínimo. Obtenga atención medica si se presenta algún síntoma del fluido despues de lavarse.

Safety notice 6

⚠ DANGER

To avoid shock, do not remove the plastic cover that protects the lower part of the inverter card.

Afin d'éviter tout risque de choc électrique, ne retirez pas le cache en plastique protégeant la partie inférieure de la carte d'alimentation.

Aus Sicherheitsgründen die Kunststoffabdeckung, die den unteren Teil der Spannungswandlerplatine umgibt, nicht entfernen.

כדי למנוע התחשמלות, אין להסיר את מכסה הפלסטיק
המגן על חלקו התחתון של הברטיס ההפוך.

Per evitare scosse elettriche, non rimuovere la copertura in plastica che avvolge la parte inferiore della scheda invertitore.

感電を防ぐため、インバーター・カードの下部を保護しているプラスチック・カバーを外さないでください。

Para evitar descargas, no quite la cubierta de plástico que rodea la parte baja de la tarjeta invertida.

Safety notice 7

⚠ DANGER

Though the main batteries have low voltage, a shorted or grounded battery can produce enough current to burn personnel or combustible materials.

Bien que le voltage des batteries principales soit peu élevé, le court-circuit ou la mise à la masse d'une batterie peut produire suffisamment de courant pour brûler des matériaux combustibles ou causer des brûlures corporelles graves.

Obwohl Hauptbatterien eine niedrige Spannung haben, können sie doch bei Kurzschluß oder Erdung genug Strom abgeben, um brennbare Materialien zu entzünden oder Verletzungen bei Personen hervorzurufen.

אף שהסוללות הראשיות הן בעלות מתח נמוך, סוללה
מקוצרת או מוארקת עלולה להפיק זרם משפיק לגרימת
כוויות או להצתת חומרים דליקים.

Sebbene le batterie di alimentazione siano a basso voltaggio, una batteria in corto circuito o a massa può fornire corrente sufficiente da bruciare materiali combustibili o provocare ustioni ai tecnici di manutenzione.

メイン・バッテリーの電圧は低くても、ショートしたり、接地したバッテリーが、作業者にやけどを負わせたり、可燃物を燃やすだけの電流を発生させる場合があります。

Aunque las baterías principales tienen un voltaje bajo, una batería cortocircuitada o con contacto a tierra puede producir la corriente suficiente como para quemar material combustible o provocar quemaduras en el personal.

Safety notice 8

⚠ DANGER

Before removing any FRU, turn off the computer, unplug all power cords from electrical outlets, remove the battery pack, and then disconnect any interconnecting cables.

Avant de retirer une unité remplaçable en clientèle, mettez le système hors tension, débranchez tous les cordons d'alimentation des socles de prise de courant, retirez la batterie et déconnectez tous les cordons d'interface.

Die Stromzufuhr muß abgeschaltet, alle Stromkabel aus der Steckdose gezogen, der Akku entfernt und alle Verbindungskabel abgenommen sein, bevor eine FRU entfernt wird.

לפני סילוק FRU כלשהו, יש לכבות את המחשב,
לנתק את כל כבלי החשמל משקעי החשמל, להוציא
את מארז הסוללה, ואז לנתק כבלי חיבור אחרים
אם יש כאלה.

Prima di rimuovere qualsiasi FRU, spegnere il sistema, scollegare dalle prese elettriche tutti i cavi di alimentazione, rimuovere la batteria e poi scollegare i cavi di interconnessione.

FRU を取り外す前に、 ThinkPad の電源を切って、すべての電源コードをコンセントから外してください。次に、バッテリー・パックを外し、相互接続ケーブルを外してください。

Antes de quitar una FRU, apague el sistema, desenchufe todos los cables de las tomas de corriente eléctrica, quite la batería y, a continuación, desconecte cualquier cable de conexión entre dispositivos.

Laser compliance statement

Some models of Lenovo ideapad computer are equipped from the factory with an optical storage device such as a CD-ROM drive or a DVD-ROM drive. Such devices are also sold separately as options. If one of these drives is installed, it is certified in the U.S. to conform to the requirements of the Department of Health and Human Services 21 Code of Federal Regulations (DHHS 21 CFR) Subchapter J for Class 1 laser products. Elsewhere, the drive is certified to conform to the requirements of the International Electrotechnical Commission (IEC) 825 and CENELEC EN 60 825 for Class 1 laser products.

If a CD-ROM drive, a DVD-ROM drive, or another laser device is installed, note the following:

⚠ CAUTION

Use of controls or adjustments or performance of procedures other than those specified herein might result in hazardous radiation exposure.

O uso de controles, ajustes ou desempenho de procedimentos diferentes daqueles aqui especificados pode resultar em perigosa exposição à radiação.

凡未在这里指明的任何控制用法、调整、行为，
都会导致严重后果。

Pour éviter tout risque d'exposition au rayon laser, respectez les consignes de réglage et d'utilisation des commandes, ainsi que les procédures décrites.

Werden Steuer- und Einstellelemente anders als hier festgesetzt verwendet, kann gefährliche Laserstrahlung auftreten.

Az itt előírt eljárásoktól, beállításoktól és vezérlésektől
eltérni a lézersugárzás veszélye miatt kockázatos !

L'utilizzo di controlli, regolazioni o l'esecuzione di procedure diverse da quelle specificate possono provocare l'esposizione a.

Использование элементов настройки и
выполнение процедур иных, чем указано
здесь, может привести к опасному
радиационному облучению.

Použitie kontrôl, úprav alebo iných vykonaní od iných
výrobcov, ako je v tomto špecifikované, mohlo by mať
za následok nebezpečenstvo vystavenia sa vyžiarovaniu.

本書で指定された内容以外の、お客様による整備、調整、または手順を行った場合、レーザー光の放射の危険があります。

El uso de controles o ajustes o la ejecución de procedimientos distintos de los aquí especificados puede provocar la exposición a radiaciones peligrosas.

Opening the CD-ROM drive, the DVD-ROM drive, or any other optical storage device could result in exposure to hazardous laser radiation. There are no serviceable parts inside those drives. **Do not open**.

A CD-ROM drive, a DVD-ROM drive, or any other storage device installed may contain an embedded Class 3A or Class 3B laser diode. Note the following:

⚠ DANGER

Emits visible and invisible laser radiation when open. Do not stare into the beam, do not view directly with optical instruments, and avoid direct exposure to the beam.

Radiação por raio laser ao abrir. Não olhe fixo no feixe de luz, não olhe diretamente por meio de instrumentos óticos e evite exposição direta com o feixe de luz.

开启时会有激光发射时，请勿盯视激光光束，请勿直接查看视觉仪器，并且避免直接接触在激光光束之中。

Rayonnement laser si carter ouvert. Évitez de fixer le faisceau, de le regarder directement avec des instruments optiques, ou de vous exposer au rayon.

Laserstrahlung bei geöffnetem Gerät. Nicht direkt oder über optische Instrumente in den Laserstrahl sehen und den Strahlungsbereich meiden.

Kinyitáskor lézersugár ! Ne nézzen bele se szabad szemmel, se optikai eszközökkel. Kerülje a sugárnyalábbal való érintkezést!

Aprendo l'unità vengono emesse radiazioni laser. Non fissare il fascio, non guardarlo direttamente con strumenti ottici e evitare l'esposizione diretta al fascio.

Открывая, берегитесь лазерного излучения.
Не смотрите на луч, не разглядывайте его
с помощью оптических инструментов, а также
избегайте прямого воздействия лазерного луча.

Keď je laserová jednotka otvorená. Vyhnite sa priamemu pohľadu a nehľadte priamo s optickými nástrojmi do ľúča a vyhnite sa priamemu vystaveniu ľúčov.

開けるとレーザー光が放射されます。光線を見つめたり、光学機械を使って直接見たりしないでください。

Radiación láser al abrir. No mire fijamente ni examine con instrumental óptico el haz de luz. Evite la exposición directa al haz.

Important service information

This chapter presents the following important service information:

- "Strategy for replacing FRUs" on page 16
  - "Important notice for replacing a system board" on page 17
- "Important information about replacing RoHS compliant FRUs" on page 18

Important:

BIOS and device driver fixes are customer-installable. The BIOS and device drivers are posted on the customer support site:
http://support.lenovo.com.

Strategy for replacing FRUs

Before replacing parts:

Make sure that all software fixes, drivers, and BIOS downloads are installed before replacing any FRUs listed in this manual.

After a system board is replaced, ensure that the latest BIOS is loaded to the system board before completing the service action.

To download software fixes, drivers, and BIOS, follow the steps below:

1. Go to http://support.lenovo.com.
2. Enter a serial number or select a product or use Lenovo smart downloading.
3. Select the BIOS/Driver/Applications and download.
4. Follow the directions on the screen and install the necessary software.

Use the following strategy to prevent unnecessary expense for replacing and servicing FRUs:

- If you are instructed to replace an FRU, but the replacement does not solve the problem, reinstall the original FRU before you continue.
- Some computers have both a processor board and a system board. If you are instructed to replace either of them, and replacing one of them does not solve the problem, reinstall that board, and then replace the other one.
- If an adapter or a device consists of more than one FRU, any of the FRUs may be the cause of the error. Before replacing the adapter or device, remove the FRUs one by one to see if the symptoms change. Replace only the FRU that changed the symptoms.

Attention: The setup configuration on the computer you are servicing may have been customized. Running Automatic Configuration may alter the settings. Note the current configuration settings (using the View Configuration option); then, when service has been completed, verify that those settings remain in effect.

Important notice for replacing a system board

Some components mounted on a system board are very sensitive. Improper handling can cause damage to those components, and may cause a system malfunction.

Attention: When handling a system board:

- Do not drop the system board or apply any excessive force to it.
- Avoid rough handling of any kind.
- Avoid bending the system board and hard pushing to prevent cracking at each BGA (Ball Grid Array) chipset.

Important information about replacing RoHS compliant FRUs

RoHS, The Restriction of Hazardous Substances in Electrical and Electronic Equipment Directive (2002/95/EC) is a European Union legal requirement affecting the global electronics industry. RoHS requirements must be implemented on Lenovo products placed on the market after June 2006. Products on the market before June 2006 are not required to have RoHS compliant parts. If the original FRU parts are non-compliant, replacement parts can also be non-compliant. In all cases if the original FRU parts are RoHS compliant, the replacement part must also be RoHS compliant.

Note: RoHS and non-RoHS FRU part numbers with the same fit and function are identified with unique FRU part numbers.

Lenovo plans to transit to RoHS compliance well before the implementation date and expects its suppliers to be ready to support Lenovo's requirements and schedule in the EU. Products sold in 2005 and 2006 will contain some RoHS compliant FRUs. The following statement pertains to these products and any product Lenovo produces containing RoHS compliant FRUs.

RoHS compliant FRUs have unique FRU part numbers. Before or after the RoHS implementation date, failed RoHS compliant parts must always be replaced with RoHS compliant ones, so only the FRUs identified as compliant in the system HMM or direct substitutions for those FRUs may be used.

Products marketed before June 2006		Products marketed after June 2006	
Current or original part	**Replacement FRU**	**Current or original part**	**Replacement FRU**
Non-RoHS	Can be Non-RoHS	Must be RoHS	Must be RoHS
Non-RoHS	Can be RoHS		
Non-RoHS	Can sub to RoHS		
RoHS	Must be RoHS		

Note: A direct substitution is a part with a different FRU part number that is automatically shipped by the distribution center at the time of the order.

General checkout

This chapter presents the following information:

- “What to do first” on page 20
- “Power system checkout” on page 21

Before you go to the checkout, make sure to read the following important notes:

Important notes:

- **Only certified trained personnel can service the computer.**
- **Before replacing any FRU, read the entire page on removing and replacing FRUs.**
- **Carefully remove screws for reuse when replacing FRUs.**
- **Be extremely careful during such write operations as copying, saving, or formatting.** Drives in the computer that you are servicing sequence might have been altered. If you select an incorrect drive, data or programs might be overwritten.
- **Replace an FRU only with another FRU of the correct model.** When you replace an FRU, make sure that the machine model and the FRU part number are correct by referring to the FRU parts list.
- **An FRU should not be replaced just because of a single, unreproducible failure.** Single failures can occur for a variety of reasons that have nothing to do with a hardware defect, such as cosmic radiation, electrostatic discharge, or software errors. Consider replacing an FRU only when a problem recurs. If you suspect that an FRU is defective, clear the error logs and run the test again. If the error does not recur, do not replace the FRU.
- **Be careful not to replace a nondefective FRU.**

What to do first

When you do return an FRU, you must include the following information in the parts exchange form or parts return form that you attach to it:

1. Name and phone number of servicer
2. Date of service
3. Date on which the machine failed
4. Date of purchase
5. Procedure index and page number in which the failing FRU was detected
6. Failing FRU name and part number
7. Machine type, model number, and serial number
8. Customer's name and address

Note for warranty: During the warranty period, the customer may be responsible for repair costs if the computer damage was caused by misuse, accident, modification, unsuitable physical or operating environment, or improper maintenance by the customer.

The following is a list of some common items that are not covered under warranty and some symptoms that might indicate that the system was subjected to stress beyond normal use.

Before checking problems with the computer, determine whether the damage is covered under the warranty by referring to the following list:

The following are not covered under warranty:

- LCD panel cracked from the application of excessive force or from being dropped
- Scratched (cosmetic) parts
- Distortion, deformation, or discoloration of the cosmetic parts
- Plastic parts, latches, pins, or connectors that have been cracked or broken by excessive force
- Damage caused by liquid spilled into the system
- Damage caused by the improper insertion of a PC Card or the installation of an incompatible card
- Improper disc insertion or use of an optical drive
- Diskette drive damage caused by pressure on the diskette drive cover, foreign material in the drive, or the insertion of a diskette with multiple labels
- Damaged or bent diskette eject button
- Fuses blown by attachment of a nonsupported device
- Forgotten computer password (making the computer unusable)
- Sticky keys caused by spilling a liquid onto the keyboard
- Use of an incorrect AC adapter on laptop products

The following symptoms might indicate damage caused by nonwarranted activities:

- Missing parts might be a symptom of unauthorized service or modification.
- If the spindle of a hard disk drive becomes noisy, it may have been subjected to excessive force, or dropped.

Power system checkout

To verify a symptom, follow the steps below:

1. Turn off the computer.
2. Connect the AC adapter.
3. Make sure that power is supplied when you turn on the computer.
4. Turn off the computer.
5. Disconnect the AC adapter.
6. Make sure that the battery pack supplies power when you turn on the computer.

If you suspect a power problem, see the appropriate one of the following power supply checkouts:

- "Checking the AC adapter" on page 21
- "Checking operational charging" on page 21

Checking the AC adapter

You are here because the computer fails only when the AC adapter is used.

- If the power-on indicator does not turn on, check the power cord of the AC adapter for correct continuity and installation.
- If the computer does not charge during operation, go to "Checking operational charging".

To check the AC adapter, follow the steps below:

1. Unplug the AC adapter cable from the computer.
2. Measure the output voltage at the plug of the AC adapter cable. See the following figure:



Pin	Voltage (V DC)
1	+12
2	0

Note: Output voltage for the AC adapter pin No. 2 may differ from the one you are servicing.

3. If the voltage is not correct, replace the AC adapter.
4. If the voltage is acceptable, do the following:

- Replace the system board.
- If the problem continues, go to "Lenovo ideapad MIIX 510-12ISK" on page 26.

Note: Noise from the AC adapter does not always indicate a defect.

Checking operational charging

To check whether the battery charges properly during operation, use a discharged battery pack or a battery pack that has less than 50% of the total power remaining when installed in the computer.

Perform operational charging. If the battery status indicator or icon does not light on, remove the battery pack and let it return to room temperature. Reinstall the battery pack. If the charge indicator or icon is still off, replace the battery pack.

If the charge indicator still does not light on, replace the system board. Then reinstall the battery pack.

Related service information

This chapter presents the following information:

- “Restoring the factory contents by using Recovery system” on page 23
- “Passwords” on page 23
- “Power management” on page 24

Restoring the factory contents by using Recovery system

Restore of factory default

The Lenovo ideapad MIIX 510-12ISK computers come with pre-installed Recovery system.In order to save application files and the initial backed up files of the system, the hard disk in a Lenovo computer includes a hidden partition when it is shipped. If you need to restore the system to the point of your first boot up, just enter Lenovo Recovery system and run **System Recovery**. For details of Recovery system, see *the User Guide for Lenovo Recovery system.*

Note: This will delete all the new data on the system partition (C drive), which is not recoverable. Make sure to back up your critical data before you perform this action.

When you use the recovery discs to boot your computer, the system will enter the user interface for system recovery automatically. Please follow the prompt to insert the backup discs to complete the whole recovery process.

Note: The recovery process might take up to 2 hours.

Passwords

As many as two passwords may be needed for any Lenovo ideapad computer: the power-on password (POP) and the supervisor password (SVP).

If any of these passwords has been set, a prompt for it appears on the screen whenever the computer is turned on. The computer does not start until the password is entered.

Exception: If only an SVP is installed, the password prompt does not appear when the operating system is booted.

Power-on password

A power-on password (POP) protects the system from being powered on by an unauthorized person. The password must be entered before an operating system can be booted.

Supervisor password

A supervisor password (SVP) protects the system information stored in the BIOS Setup Utility. The user must enter the SVP in order to get access to the BIOS Setup Utility and change the system configuration.

Attention: If the SVP has been forgotten and cannot be made available to the servicer, there is no service procedure to reset the password. The system board must be replaced for a scheduled fee.

Power management

Note: Power management modes are not supported for APM operating system.

To reduce power consumption, the computer has three power management modes: screen blank, sleep (standby), and hibernation.

Screen blank mode

If the time set on the “Turn off monitor” timer in the operating system expires, the LCD backlight turns off.

To end screen blank mode and resume normal operation, press any key.

Putting the computer to sleep or shutting it down

When you have finished working with your computer, you can put it to sleep or shut it down.

Putting your computer to sleep

If you will be away from your computer for only a short time, put the computer to sleep.

When the computer is in sleep mode, you can quickly wake it to resume use, bypassing the startup process.

To put the computer to sleep, do one of the following:

- Press the Power button.
- Select the Start button, then select **Power** → **Sleep**.

Note: Put your computer to sleep before you move it. Moving your computer while the hard disk drive is spinning can damage the hard disk, causing loss of data.

To wake up the computer, perform the following:

- Press the Power button.

Shutting down the computer

If you are not going to use your computer for a long time, shut it down.

To shut down the computer, do one of the following:

- Select the Start button, then select **Power** → **Shut down**.

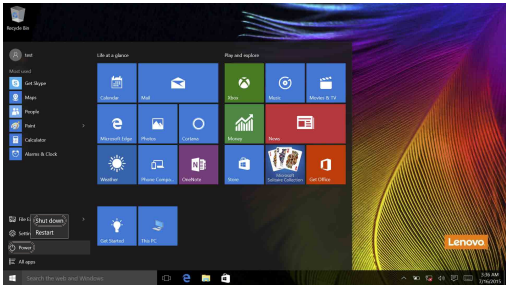

- Right-click or press the Start button in the lower-left corner and select **Shut down or sign out** → **Shut down**.

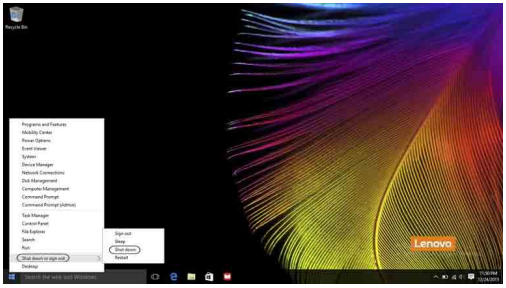

Lenovo ideapad MIIX 510-12ISK

This chapter presents the following product-specific service references and product-specific parts information:

- "Specifications" on page 26
- "Hotkeys" on page 28
- "FRU replacement notices" on page 29
- "Removing and replacing an FRU" on page 30
- "Locations" on page 56
- "Parts list" on page 58

Specifications

The following table lists the specifications of the Lenovo ideapad MIIX 510-12ISK :

Table 1. Specifications

Tablet

Form Factor	
Dimensions	Appr. 301.9 mm × 203.1 mm × 10.1 mm
Weight	Appr. 880 g
LCD size	12.2 inch
Processor	
See the system properties of your computer. You can do this as follows: Click **Control Panel**, then click **Hardware and Sound**, click **Device Manager** under **Devices and Printers** and double click **Processors**.	
Memory	
Type	DDR4, Onboard
Maximum supported capacity	8 GB
Storage	
Capacity	SSD 128 GB/256 GB/512 GB
Interface	PCIE
Display	
Touch screen	Multi-touch screen
Display resolution	16:10 (1,920 × 1,200 pixels)
I/O Ports	
Audio	Combo audio jack × 1
Video/Audio	Typc-C port × 1
USB	USB 3.0 port × 1, Typc-C port × 1
Battery pack	
Type	Li-ion battery pack
Capacity	2 Cells, 39 Wh
Note: The capacity given here is the typical or average capacity as measured in a specific test environment. Capacities measured in other environments may differ but are no lower than the rated capacity (see product label).	

Table 1. Specifications (continued)

AC power adapter	
Input	100-240 V, 50-60 Hz AC
Output voltage	20 V DC
Power	45 W
Miscellaneous	
Camera	2.0 MP (front camera) 5.0 MP (rear camera)

Keyboard folio

Form Factor	
Dimensions	Appr. 303.9 mm × 219.1 mm × 6.0 mm
Weight	Appr. 380 g
I/O Ports	
Pogo pin with guide pin	Pogo pin with guide pin × 1

Hotkeys

You can access certain system settings quickly by pressing the appropriate hotkeys.

Table 2. Hotkeys

 :	Mutes/unmutes the sound.
 :	Decreases the volume level.
 :	Increases the volume level.
 :	Closes the currently active window.
 :	Refreshes the desktop or the currently active window.
 :	Enables/disables the touch pad.
 :	Enables/disables Airplane mode.
 :	Displays all currently active apps.
 :	Open the web browser.
 :	Toggles the display between the computer and an external device.
 :	Decreases display brightness.
 :	Increases display brightness.

FRU replacement notices

This section presents notices related to removing and replacing parts. Read this section carefully before replacing any FRU.

Screw notices

Loose screws can cause a reliability problem. In the Lenovo ideapad computer, this problem is addressed with special nylon-coated screws that have the following characteristics:

- They maintain tight connections.
- They do not easily come loose, even with shock or vibration.
- They are harder to tighten.

Do the following when you service this machine:

- Keep the screw kit in your tool bag.
- Carefully remove screws for reuse when replacing FRUs.
- Use a torque screwdriver if you have one.

Tighten screws as follows:

- **Plastic to plastic**

  Turn an additional 90° after the screw head touches the surface of the plastic part:

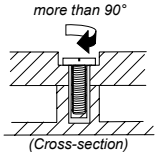

- **Logic card to plastic**

  Turn an additional 180° after the screw head touches the surface of the logic card:

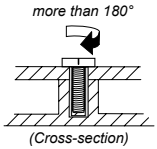

- **Torque driver**

  If you have a torque screwdriver , refer to the “Torque” column for each step.
- Make sure that you use the correct screws. If you have a torque screwdriver, tighten all screws firmly to the torque shown in the table. **Carefully remove screws for reuse when replacing FRUs. Make sure that all screws are tightened firmly.**
- Ensure torque screwdrivers are calibrated correctly following country specifications.

Removing and replacing an FRU

This section presents exploded figures with the instructions to indicate how to remove and replace the FRU. Make sure to observe the following general rules:

1. Do not attempt to service any computer unless you have been trained and certified. An untrained person runs the risk of damaging parts.
2. Before replacing any FRU, review “FRU replacement notices” on page 29.
3. Begin by removing any FRUs that have to be removed before the failing FRU. Any of such FRUs are listed at the top of the page. Remove them in the order in which they are listed.
4. Follow the correct sequence in the steps to remove the FRU, as given in the figures by the numbers in square callouts.
5. When turning a screw to replace an FRU, turn it in the direction as given by the arrow in the figure.
6. When removing the FRU, move it in the direction as given by the arrow in the figure.
7. To put the new FRU in place, reverse the removal procedures and follow any of the notes that pertain to replacement. For information about connecting and arranging internal cables, see “Locations” on page 56.
8. When replacing an FRU, use the correct screw as shown in the procedures.

> **⚠ DANGER**
>
> Before removing any FRU, turn off the computer, unplug all power cords from electrical outlets, and then disconnect any of the interconnecting cables.

Attention: After replacing an FRU, do not turn on the computer until you have made sure that all screws, springs, and other small parts are in place and none are loose inside the computer. Verify this by shaking the computer gently and listening for rattling sounds. Metallic parts or metal flakes can cause electrical short circuits.

Attention: The system board is sensitive to, and can be damaged by, electrostatic discharge. Before touching it, establish personal grounding by touching a ground point with one hand or using an electrostatic discharge (ESD) strap (P/N 6405959) to remove potential shock reasons.

Note: The illustrations used in this section are of the Wi-Fi model, unless otherwise stated.

1010 LCD cover

Figure 1. Removal step of LCD cover

As shown by the arrows, flip the stand cover gently to the desired angle by inserting your finger in the finger recess between the stand cover and the bottom plate.

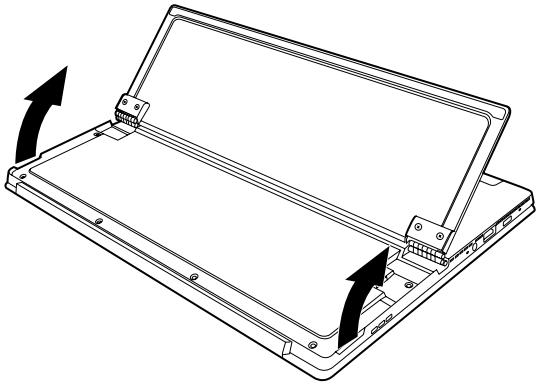

Remove screws ■.

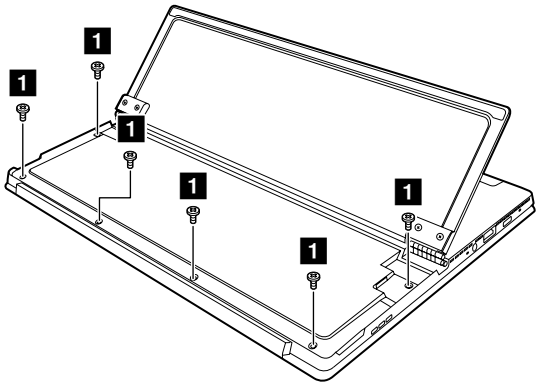

Figure 1. Removal step of LCD cover (continued)
Detach the touch pad and LCD panel connectors in the directions shown by arrows 2 and 3.

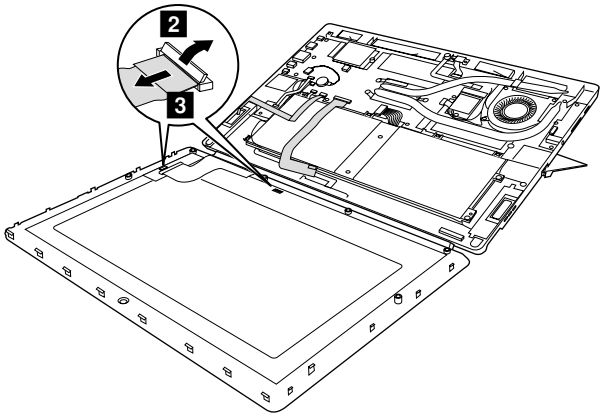

Remove the LCD cover in the direction shown by arrow 4.

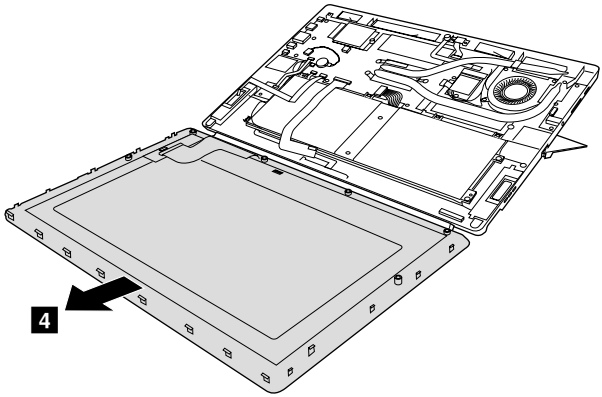

Step	Screw (quantity)	Color	Torque
2	M2 × 3, A COVER TO FRAME (6)	Silver	1.5-2.0 kgf*cm

1020 Battery pack

For access, remove this FRU:

- “1010 LCD cover” on page 31

> **⚠ DANGER**
>
> Only use the battery specified in the parts list for your computer. Any other battery could ignite or explode.

Figure 2. Removal steps of battery pack

Disconnect the battery connector in the direction shown by arrow ■, remove screws 2, then remove the battery.

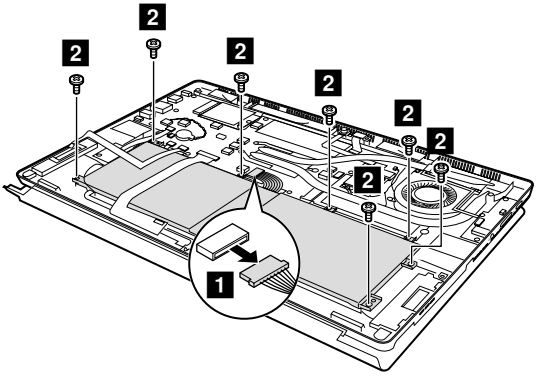

Remove the battery pack in the direction shown by arrow 3.

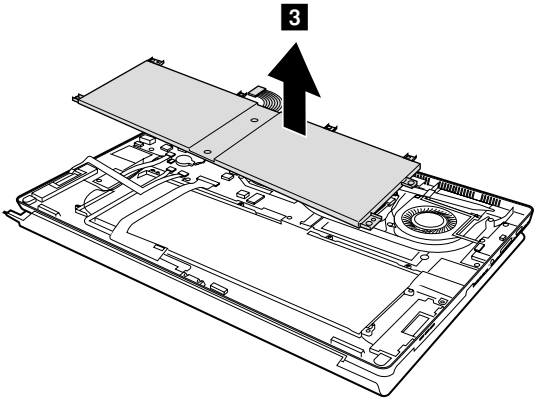

When installing: Make sure the battery pack connector is attached firmly.

Step	Screw (quantity)	Color	Torque
2	M2 × 3, (7)	Black	1.5-2.0 kgf*cm

Figure 2. Removal steps of battery pack (continued)

Notes: In order to get better Radio Frequency signal, sponges should be applied when installing.

The illustrations used in this section are of the Wi-Fi model. For other models, please refer to the actual product.

For Wi-Fi models

Apply sponges on area A (LCD cover).

Apply sponges on area B, along the USB connector.

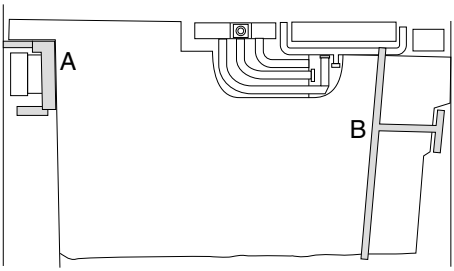

For LTE models

Apply sponges on area A.

Apply sponges on area B, along the USB connector.

Apply the conductive fabric on area C.

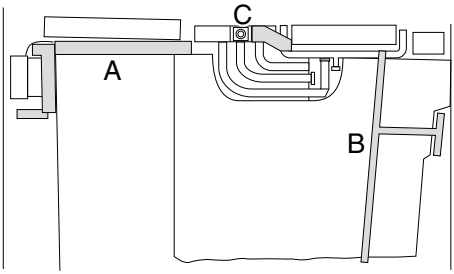

For 3D models

Apply sponges on the gap between the 3D camera and the Wi-Fi antenna (area A).

Apply sponges on the LCD cover (area B).

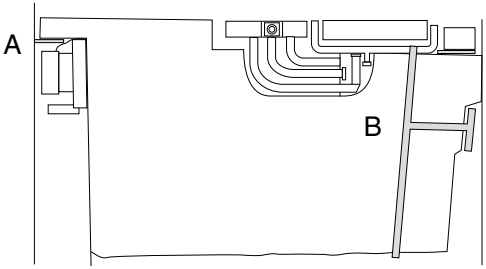

1030 PCI Express Mini Card for wireless LAN

For access, remove these FRUs in order:
- “1010 LCD cover” on page 31
- “1020 Battery pack” on page 33

Important:

The preinstalled WLAN module may only be replaced with a Lenovo approved module in order to comply with FCC and IC regulations. Refer to Table 3 “Parts list-Overall” on page 60 for Lenovo part numbers for the approved modules.

Figure 3. Removal steps of PCI Express Mini Card for wireless LAN

Disconnect the two wireless LAN cables (black, white) ■. Remove the screw 2.

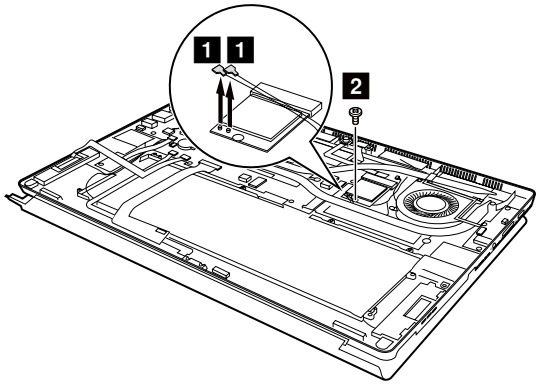

Step	Screw (quantity)	Color	Torque
2	M1.4 × 2.0, NGFF to Bezel (1)	Black	1.0-1.5kgf*cm

In step ■, unplug the jacks by using the removal tool antenna RF connector (P/N: 08K7159), or pick up the connectors with your fingers and gently unplug them in the direction shown by the arrows.

When installing:
- In models with a wireless LAN card that has two antenna connectors, plug the black cable (1st) (MAIN) into the jack labeled **1**, and the grey cable (2nd) (AUX) into the jack labeled **2** on the card.

Figure 3. Removal steps of PCI Express Mini Card for wireless LAN (continued)

Remove the card in the direction shown by arrow 3.

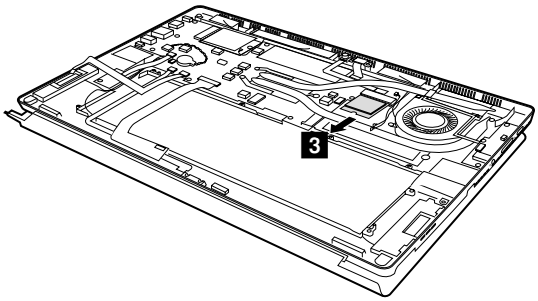

1040 SSD card and LTE card

For access, remove these FRU:
- “1010 LCD cover” on page 31
- “1020 Battery pack” on page 33
- “1030 PCI Express Mini Card for wireless LAN” on page 35

Figure 4. Removal steps of SSD card and LTE card

Remove the one screw ■.

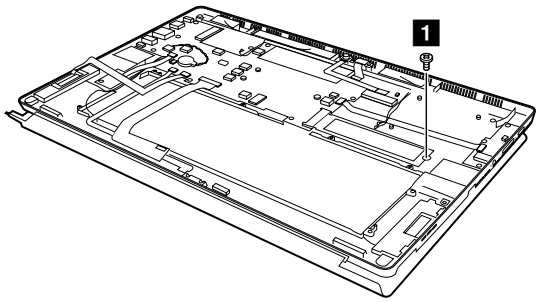

Remove the SSD card in the direction shown by arrow 2.

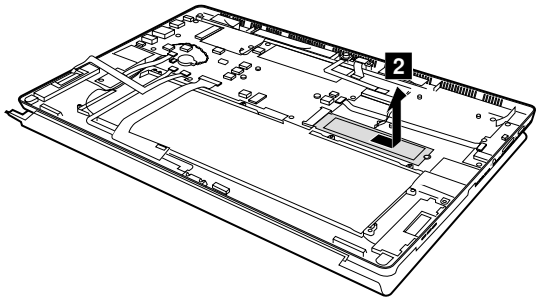

Step	Screw (quantity)	Color	Torque
■	M1.4 × 2.0, NGFF to Bezel (1)	Black	1.0-1.5kgf*cm

Figure 4. Removal steps of SSD card and LTE card (continued)

Disconnect the wireless LAN cable (black) ■. Remove the screw 2.

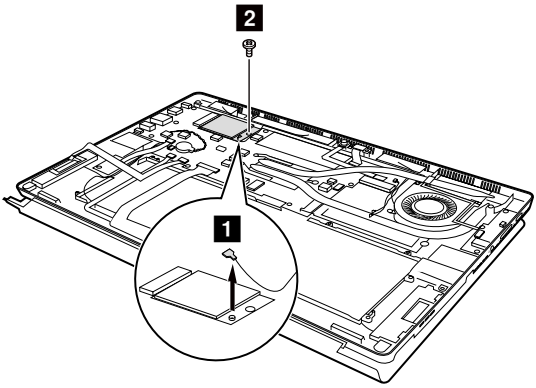

Remove the LTE card in the direction shown by arrow 3.

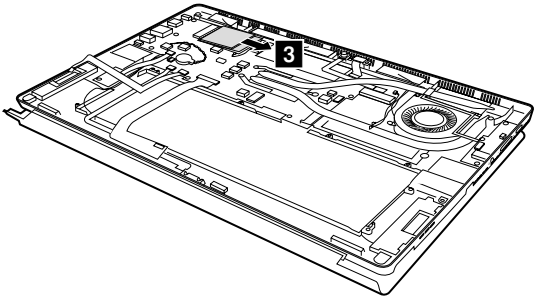

Step	Screw (quantity)	Color	Torque
■	M1.4 × 2.0, NGFF to Bezel (1)	Black	1.0-1.5kgf*cm

1050 Fan assembly and Heat Sink assembly

For access, remove these FRUs in order:

- “1010 LCD cover” on page 31
- “1020 Battery pack” on page 33
- “1030 PCI Express Mini Card for wireless LAN” on page 35
- “1040 SSD card and LTE card” on page 37

Figure 5. Removal steps of fan assembly and heat sink assembly

Unplug the fan connector in the direction shown by arrow ■ , and then remove the screws 2.

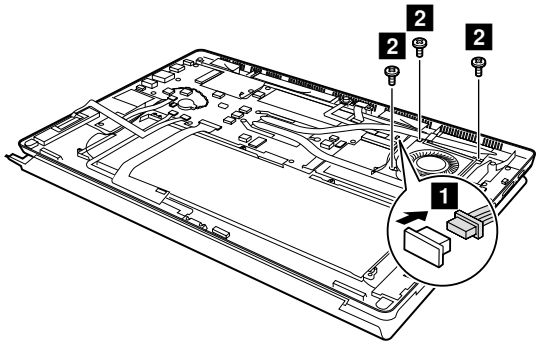

Step	Screw (quantity)	Color	Torque
2	M2 × 3, Phillips head, nylok-coated (3) FAN TO UPPER	Black	1.5-2.0 kgf/cm

When installing: Make sure that the fan connector is attached firmly to the system board.

Figure 5. Removal steps of fan assembly and heat sink assembly (continued)

Remove the fan in the direction shown by arrow 3. Be careful not to damage the connector.

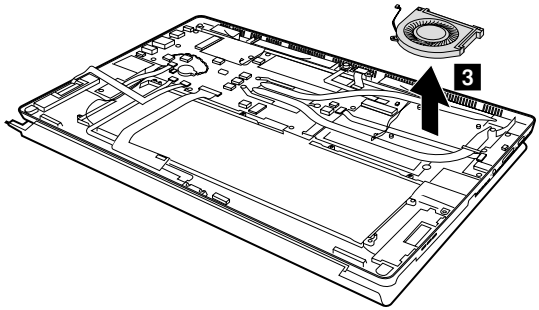

Remove the screw 4. Loosen the screws 5.

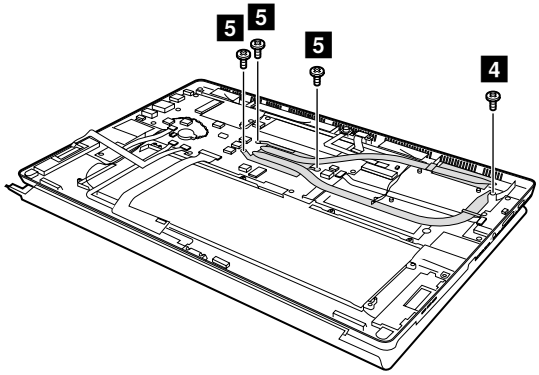

Step	Screw (quantity)	Color	Torque
4	M2 × 3, Phillips head, nylok-coated (1) THERMAL MODULE TO CPU BRK & THERMAL MODULE TO MB	Black	1.5-2.0 kgf/cm

Figure 5. Removal steps of fan assembly and heat sink assembly (continued)

Lift the heat sink in the direction shown by arrow 6.

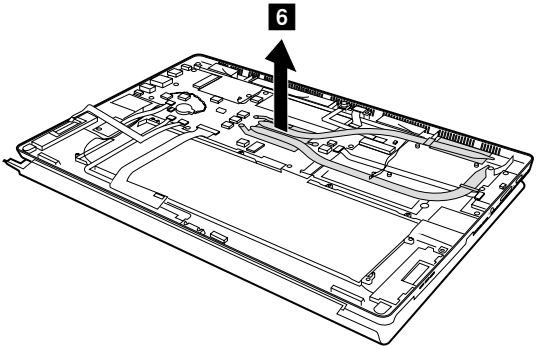

When installing: Make sure that the fan connector is attached firmly.

1060 Audio Board

For access, remove these FRUs in order:

- “1010 LCD cover” on page 31
- “1020 Battery pack” on page 33
- “1030 PCI Express Mini Card for wireless LAN” on page 35
- “1040 SSD card and LTE card” on page 37
- “1050 Fan assembly and Heat Sink assembly” on page 39

Figure 6. Removal steps of audio board

Detach the FPC connector in the direction shown by arrows 1 and 2. Loosen the screws 3.

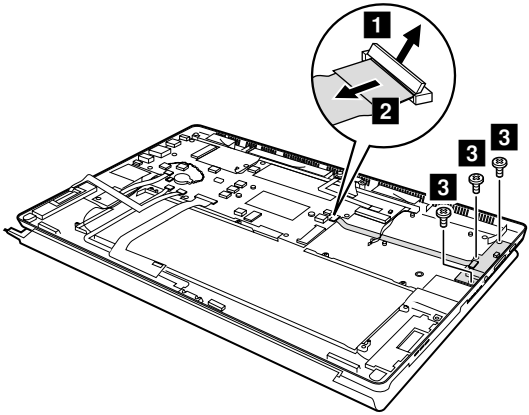

Step	Screw (quantity)	Color	Torque
3	M1.4x2.0, Audio Board to Bezel (3)	Black	1.0-1.5kgf*cm

When installing: Make sure the FPC connector is attached firmly.

Figure 6. Removal steps of Audio Board (continued)

Remove the audio board in the direction shown by arrow 4.

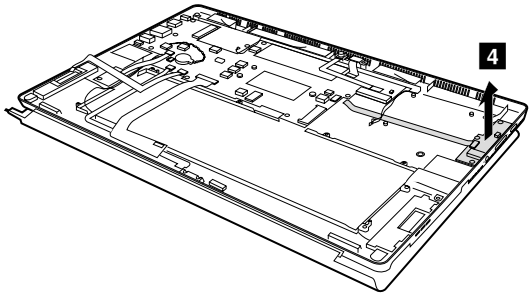

When installing: Make sure the audio board connector is attached firmly.

1070 System board

Important notices for handling the system board:

When handling the system board, bear the following in mind.

- Be careful not to drop the system board on a bench top that has a hard surface, such as metal, wood, or composite.
- Avoid rough handling of any kind.
- In the whole process, make sure not to drop or stack the system board.
- If you put a system board down, make sure to put it only on a padded surface such as an ESD mat or conductive corrugated material.

For access, remove these FRUs in order:

- "1010 LCD cover" on page 31
- "1020 Battery pack" on page 33
- "1030 PCI Express Mini Card for wireless LAN" on page 35
- "1040 SSD card and LTE card" on page 37
- "1050 Fan assembly and Heat Sink assembly" on page 39
- "1060 Audio Board" on page 42

Figure 7. Removal steps of system board

Detach the SIM card board connector and pogo cable in the direction shown by arrows ■ and 2, unplug speakers connector in the direction shown by arrow 3, detach the camera connectors in the direction shown by arrow 4. Remove the screws 5.

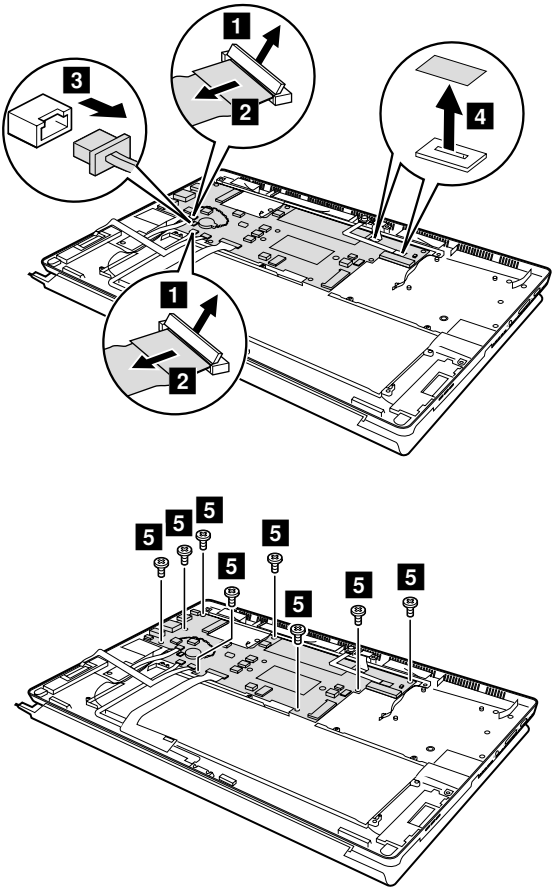

When installing: Make sure that all the connectors are attached firmly.

Step	Screw (quantity)	Color	Torque
5	M1.4 × 2.0, MB to Bezel (8)	Black	1.0-1.5kgf.cm

Figure 7. Removal steps of system board(continued)

Remove the system board as shown by arrow 6.

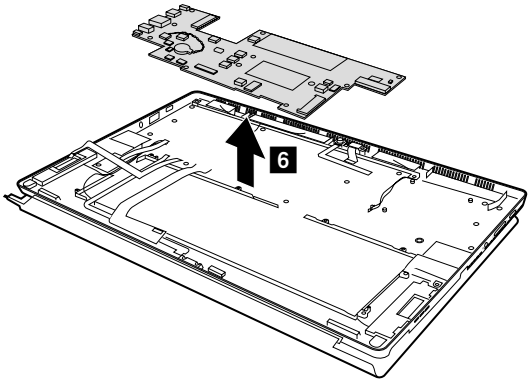

1080 Speakers

For access, remove these FRUs in order:

- “1010 LCD cover” on page 31
- “1020 Battery pack” on page 33
- “1030 PCI Express Mini Card for wireless LAN” on page 35
- “1040 SSD card and LTE card” on page 37
- “1050 Fan assembly and Heat Sink assembly” on page 39
- “1060 Audio Board” on page 42
- “1070 System board” on page 44

Figure 8. Removal steps of speakers

Remove the speakers in the direction shown by arrows ■.

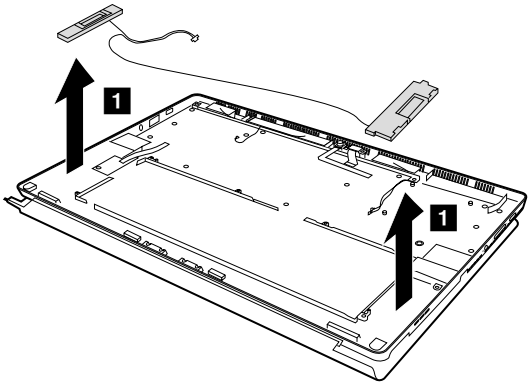

When installing: Make sure the speaker connector is attached firmly.

1090 SIM card board

For access, remove these FRUs in order:

- “1010 LCD cover” on page 31
- “1020 Battery pack” on page 33
- “1030 PCI Express Mini Card for wireless LAN” on page 35
- “1040 SSD card and LTE card” on page 37
- “1050 Fan assembly and Heat Sink assembly” on page 39
- “1060 Audio Board” on page 42
- “1070 System board” on page 44
- “1080 Speakers” on page 47

Figure 9. Removal steps of SIM card board

Detach the SIM card board connector in the direction shown by arrows 1, 2. Remove the screws 3.

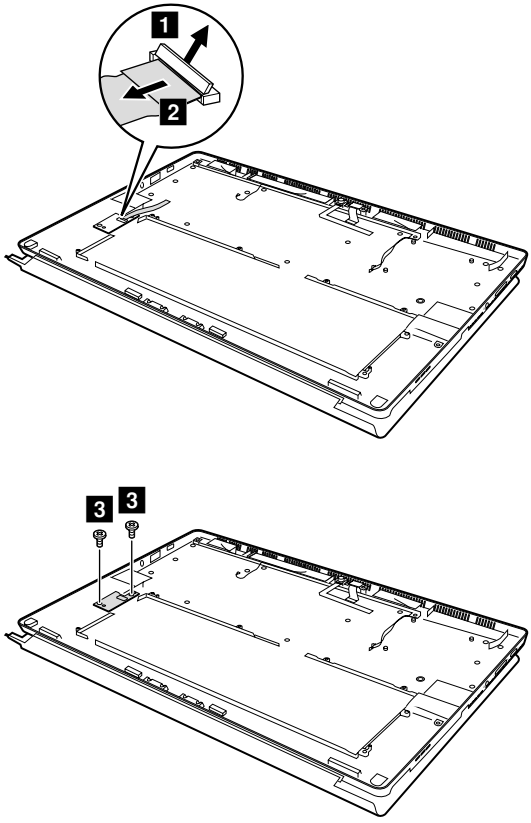

Figure 9. Removal steps of SIM card board (continued)

Remove the SIM card board 4.

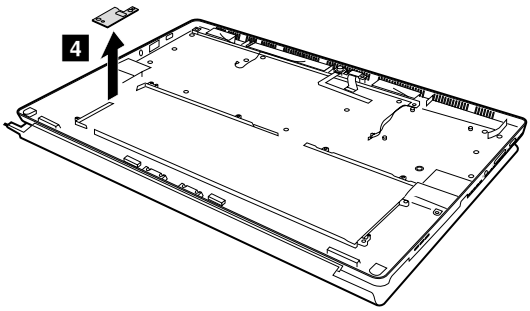

Step	Screw (quantity)	Color	Torque
2	M1.4 × 2.0, PWR assembly bracket to Bezel (2)	Black	1.0-1.5kgf*cm

When installing: Make sure the SIM card board connector is attached firmly.

1100 Integrated camera

For access, remove these FRUs in order:

- “1010 LCD cover” on page 31
- “1020 Battery pack” on page 33
- “1030 PCI Express Mini Card for wireless LAN” on page 35
- “1040 SSD card and LTE card” on page 37
- “1050 Fan assembly and Heat Sink assembly” on page 39
- “1060 Audio Board” on page 42
- “1070 System board” on page 44
- “1080 Speakers” on page 47
- “1090 SIM card board” on page 48

Figure 10. Removal steps of integrated camera

Remove the two screws ■. Remove the integrated camera in the direction shown by arrow 2.

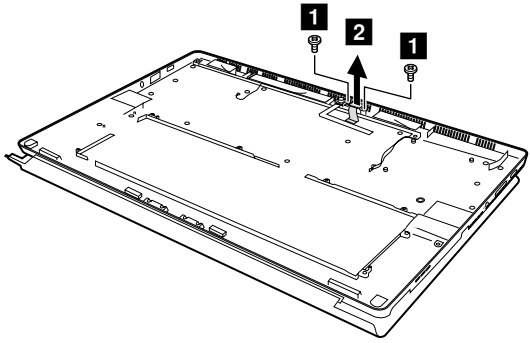

Step	Screw (quantity)	Color	Torque
■	M1.6 × 2.5, camera Board to Bezel (2)	Black	1.0-1.5kgf*cm

Remove the front camera in the direction shown by arrow 3.

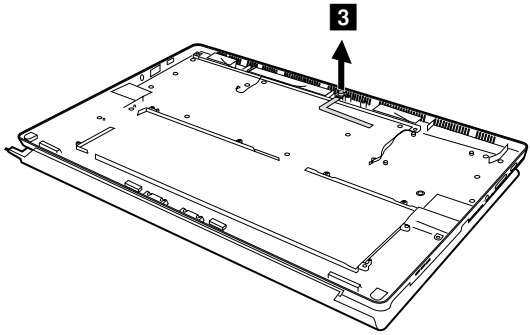

1110 Antenna Module

For access, remove these FRUs in order:

- “1010 LCD cover” on page 31
- “1020 Battery pack” on page 33
- “1030 PCI Express Mini Card for wireless LAN” on page 35
- “1040 SSD card and LTE card” on page 37
- “1050 Fan assembly and Heat Sink assembly” on page 39
- “1060 Audio Board” on page 42
- “1070 System board” on page 44
- “1080 Speakers” on page 47
- “1090 SIM card board” on page 48
- “1100 Integrated camera” on page 50

Figure 11. Removal steps of antenna module

Remove the Wi-Fi antennas in the direction shown by arrows ■.

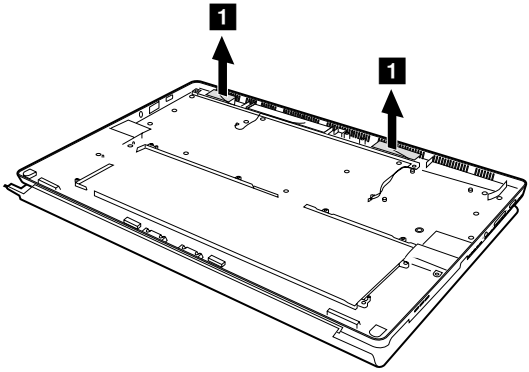

Note: For select models, the location of the antennas is different from the common models. Please refer to the actual product.

1120 Stand Cover

For access, remove these FRUs in order:

- “1010 LCD cover” on page 31
- “1020 Battery pack” on page 33
- “1030 PCI Express Mini Card for wireless LAN” on page 35
- “1040 SSD card and LTE card” on page 37
- “1050 Fan assembly and Heat Sink assembly” on page 39
- “1060 Audio Board” on page 42
- “1070 System board” on page 44
- “1080 Speakers” on page 47
- “1090 SIM card board” on page 48
- “1100 Integrated camera” on page 50
- “1110 Antenna Module” on page 51

Figure 12. Removal steps of Stand Cover

Remove the six screws ■ and four screws 2, and then remove the stand cover.

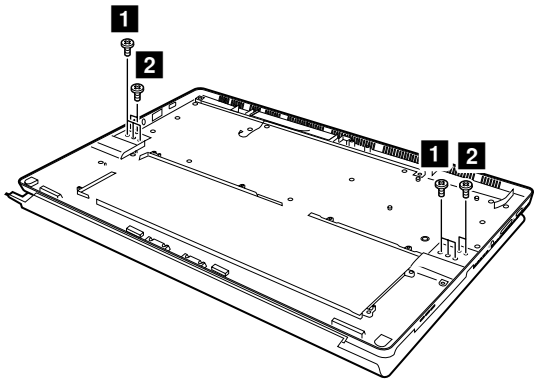

Step	Screw (quantity)	Color	Torque
■	M1.6 × 2.5, stand cover to Bezel (4)	Black	1.0-1.5kgf*cm
■	M2 × 2.5, stand cover to Bezel (6)	Silver	1.0-1.5kgf*cm

Figure 11. Removal steps of Stand Cover (continued)

Remove the Stand Cover in the direction shown by arrow 3.

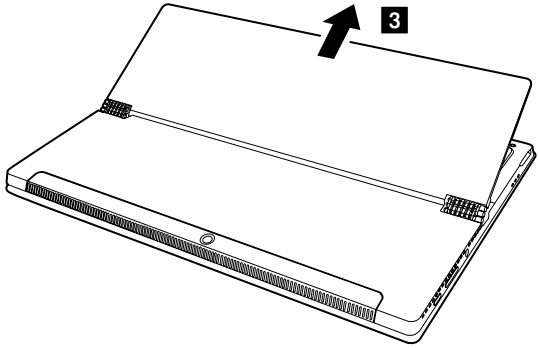

Remove the four screws 4, and then remove the hinge covers in the direction shown by arrows 5.

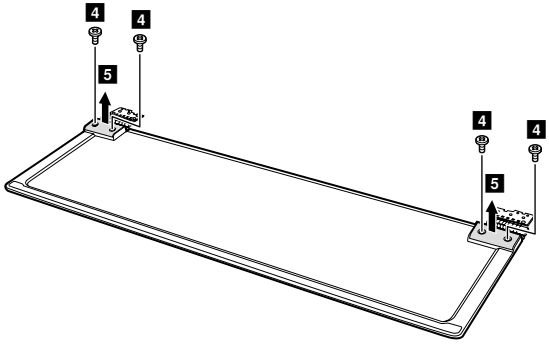

Step	Screw (quantity)	Color	Torque
3	M2.0 × 3,HINGE CAP TO STANDER COVER (4)	Silver	1.5-2.0kgf*cm

Figure 11. Removal steps of touch pad board (continued)

Remove the screws 6, and then remove the hinges in the direction shown by arrows 7.

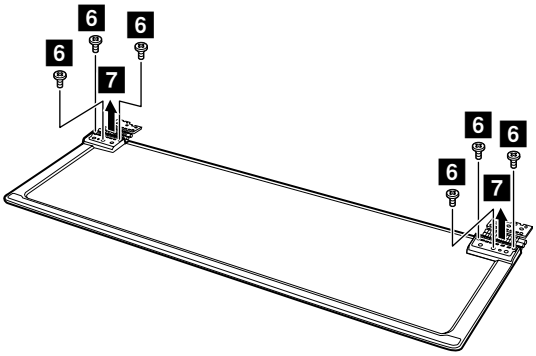

Step	Screw (quantity)	Color	Torque
4	M1.6 × 2.5, stand cover to Bezel (4)	Black	1.0-1.5kgf*cm
4	M2 × 2.5, stand cover to Bezel (2)	Silver	1.0-1.5kgf*cm

Note: Applying labels to the base cover

The new base cover FRU is shipped with a kit containing labels of several kinds. When you replace the base cover, you need to apply the following label:

The following labels need to be peeled off from the old base cover, and need to be put on the new base cover.

- **a** KCC label
- **b** BIS Label
- **c** Malaysia label
- **d** Indonesia label
- **e** Indonesia SDPPI label
- **f** South Africa label
- **g** BT WL FOR US/CA/TW / ISRAEL
- **h** ISRAEL label
- **i** Rating label

For the location of each label, refer to the following figure:

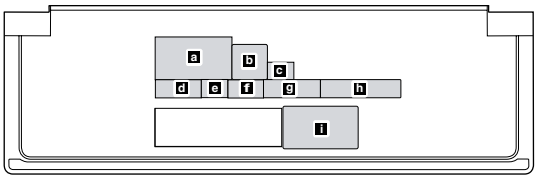

Locations

Front view

1 Front camera
2 Wireless LAN antenna
Note: For Wi-Fi models, the WLAN antennas are located in 2-1; For LTE models, the WLAN antennas are located in 2-1 and 2-2.
3 Multi-touch screen

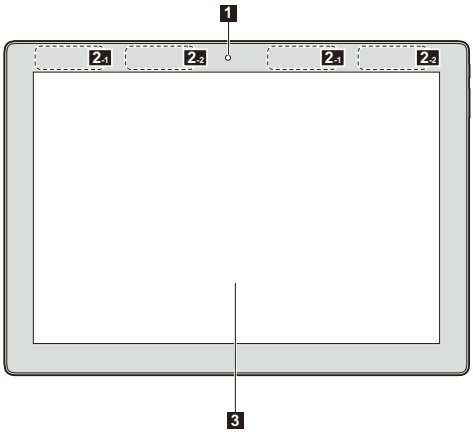

Left-side view

1 Speakers
2 Digital array microphone
3 AC power adapter jack

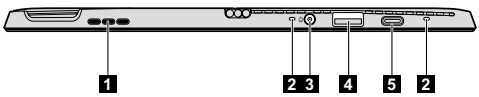

4 USB 3.0 port
5 Type-C port

Right-side view

1 Power button
2 Volume up/down button
3 Combo audio jack
4 Speakers

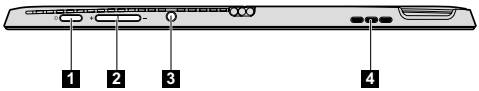

Top View

1 Ventilation slots

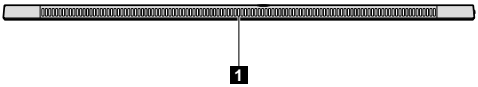

Bottom view

1 Pogo pin with guide pin

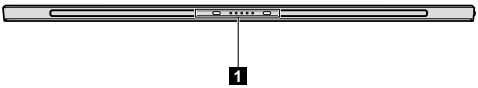

Rear view

1 Rear camera
2 Stand cover
3 SIM card slot (on the models)

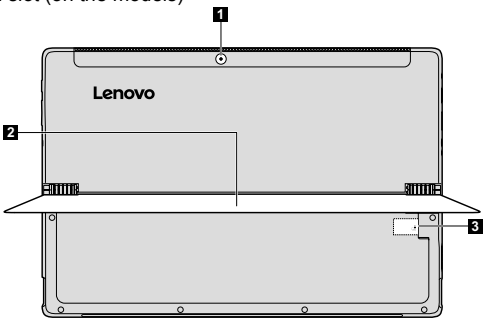

Keyboard folio top view

1 Pogo pin with guide pin
2 Keyboard
3 Touch pad

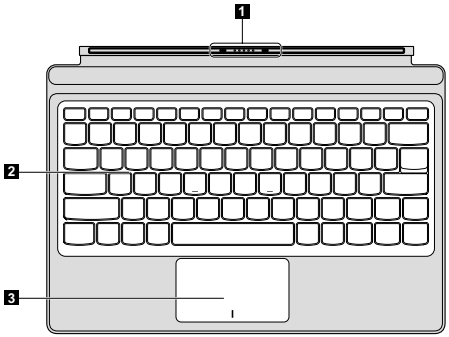

Parts list

This section presents the following service parts:

- “Overall” on page 59
- “Keyboard” on page 62
- “Miscellaneous parts” on page 64
- “Screws” on page 65

Notes:

- Each FRU is available for all types or models, unless specific types or models are specified.

Overall

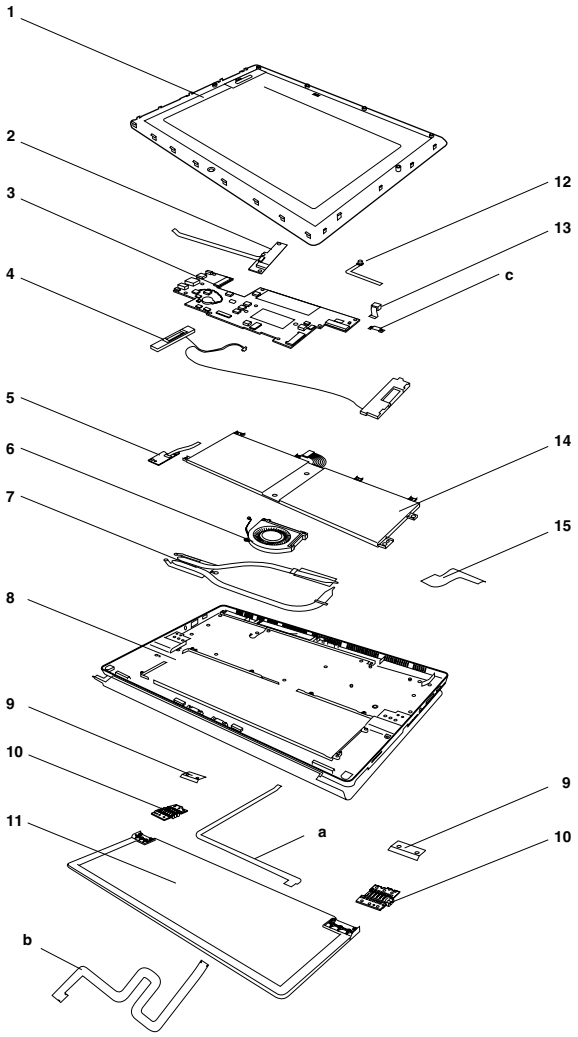

Table 3. Parts list—Overall

No.	FRU	FRU no.	CRU ID.
1	LCD Module 3N80U1 W/TP/Bezel LTE	5D10M42923	N
1	LCD Module 3N 80U1 W/TP W/Bezel	5D10M13938	
2	USB BD 3N 80U1 W/cable	5C50M13915	
3	MB 3N 80U1 I3-6100WIN UMA 4GRAM/RTC	5B20M13893	
3	MB 3N80U1 I36100WIN 4G TPM/PRC/RTC	5B20M28826	
3	MB 3N80U1 I36100WIN 4G TPM/WW/RTC	5B20M28852	
3	MB 3N80U1 I36100WIN4G TPMPRCLTE/RTC	5B20M28847	
3	MB 3N80U1 I36100WIN 4G TPMWWLTE/RTC	5B20M28851	
3	MB 3N80U1 I36100WIN 4G LTE/RTC	5B20M28819	
3	MB 3N80U1 I36100WIN 8G RTC	5B20M28841	
3	MB 3N80U1 I36100WIN 8G TPM/PRC/RTC	5B20M28848	
3	MB 3N80U1 I36100WIN 8G TPM/WW/RTC	5B20M28833	
3	MB 3N80U1 I36100WIN8G TPMPRCLTE/RTC	5B20M28850	
3	MB 3N80U1 I36100WIN 8G TPMWWLTE/RTC	5B20M28818	
3	MB 3N80U1 I36100WIN 8G LTE/RTC	5B20M28845	
3	MB 3N 80U1 I5-6200WIN UMA 4GRAM/RTC	5B20M13925	
3	MB 3N80U1 I56200WIN 4G TPM/PRC/RTC	5B20M28855	
3	MB 3N80U1 I56200WIN 4G TPM/WW/RTC	5B20M28825	
3	MB 3N80U1 I56200WIN4G TPMPRCLTE/RTC	5B20M28843	
3	MB 3N80U1 I56200WIN 4G TPMWWLTE/RTC	5B20M28829	
3	MB 3N80U1 I56200WIN 4G LTE/RTC	5B20M28838	
3	MB 3N 80U1 I5-6200WIN UMA 8GRAM/RTC	5B20M13919	
3	MB 3N80U1 I56200WIN 8G TPM/PRC/RTC	5B20M28839	
3	MB 3N80U1 I56200WIN 8G TPM/WW/RTC	5B20M28822	
3	MB 3N80U1 I56200WIN8G TPMPRCLTE/RTC	5B20M28831	
3	MB 3N80U1 I56200WIN 8G TPMWWLTE/RTC	5B20M28846	
3	MB 3N80U1 I56200WIN 8G LTE/RTC	5B20M28853	
3	MB 3N 80U1 I7-6500WIN UMA 8GRAM/RTC	5B20M13888	
3	MB 3N80U1 I76500WIN 4G RTC	5B20M28815	
3	MB 3N80U1 I76500WIN 4G TPM/PRC/RTC	5B20M28835	
3	MB 3N80U1 I76500WIN 4G TPM/WW/RTC	5B20M28827	
3	MB 3N80U1 I76500WIN4G TPMPRCLTE/RTC	5B20M28832	
3	MB 3N80U1 I76500WIN 4G TPMWWLTE/RTC	5B20M28814	
3	MB 3N80U1 I76500WIN 4G LTE/RTC	5B20M28840	
3	MB 3N80U1 I76500WIN 8G TPM/PRC/RTC	5B20M28844	
3	MB 3N80U1 I76500WIN 8G TPM/WW/RTC	5B20M28828	
3	MB 3N80U1 I76500WIN8G TPMPRCLTE/RTC	5B20M28813	
3	MB 3N80U1 I76500WIN 8G TPMWWLTE/RTC	5B20M28842	

Table 3. Parts list—Overall (continued)

No.	FRU	FRU no.	CRU ID.
3	MB 3N80U1 I76500WIN 8G LTE/RTC	5B20M28820	
3	MB 3N80U1 4405UWIN 4G RTC	5B20M28834	
3	MB 3N80U1 4405UWIN 4G TPM/PRC/RTC	5B20M28837	
3	MB 3N80U1 4405UWIN 4G TPM/WW/RTC	5B20M28854	
3	MB 3N80U1 4405UWIN 4G TPMPRCLTE/RTC	5B20M28824	
3	MB 3N80U1 4405UWIN 4G TPMWW LTE/RTC	5B20M28817	
3	MB 3N80U1 4405UWIN 4G LTE/RTC	5B20M28836	
3	MB 3N80U1 4405UWIN 8G/RTC	5B20M28812	
3	MB 3N80U1 4405UWIN 8G TPM/PRC/RTC	5B20M28821	
3	MB 3N80U1 4405UWIN 8G TPM/WW/RTC	5B20M28816	
3	MB 3N80U1 4405UWIN 8G TPMPRCLTE/RTC	5B20M28830	
3	MB 3N80U1 4405UWIN 8G TPMWW LTE/RTC	5B20M28823	
3	MB 3N80U1 4405UWIN 8G LTE/RTC	5B20M28849	
4	Speaker 3N 80U1 L+R 8Ω 1wx2	5SB0M13857	N
5	FUNCTION1 BD 3N 80U1 W/cable	5C50M13880	
6	CPU FAN 3N 80U1	5F10M13933	
7	Heatsink 3N 80U1	5H40M13914	
8	LCD Cover 3N 80U1 Silver	5CB0M13867	
8	LCD Cover 3N 80U1 Silver LTE	5CB0M42922	
9	Hinge Cover 3N 80U1 Silver	5CB0M13856	
10	Hinge L+R 3N 80U1 W/bracket	5H50M13889	
11	Stand Cover 3N 80U1 Silver	5CB0M13871	
12	CAM 3N 80U1 WIN10 2M front W/omic	5C20M13870	
13	CAM 3N 80U1 WIN10 5M rear W/omic	5C20M13853	
14	BATTERY 3N 4955mAh 7.68V 80U1	5B10L68713	
14	BATTERY 3N 5000mAh 7.7V 80U1	5B10L67278	
15	LVDS Cable 3N 80U1	5C10M13898	

Keyboard

Table 4. Parts list—Keyboard

Language		P/N	CRU ID.
NonBacklit	English	5N20M13917	
NonBacklit	U.K. English	5N20M13920	
NonBacklit	International English	5N20M13924	
NonBacklit	Thai	5N20M13873	
NonBacklit	Indian	5N20M13904	
NonBacklit	Arabic	5N20M13855	
NonBacklit	Greek	5N20M13854	
NonBacklit	Hebrew	5N20M13894	
NonBacklit	Korean	5N20M13906	
NonBacklit	Russian	5N20M13883	
NonBacklit	Traditional Chinese	5N20M13872	
NonBacklit	Bulgarian	5N20M13935	
NonBacklit	Belgian	5N20M13885	
NonBacklit	Dutch	5N20M13868	
NonBacklit	Portuguese	5N20M13860	
NonBacklit	Czechoslovakian	5N20M13901	
NonBacklit	French	5N20M13861	
NonBacklit	Canadian English&French	5N20M13876	*
NonBacklit	German	5N20M13907	
NonBacklit	Hungarian	5N20M13905	
NonBacklit	Latin	5N20M13916	
NonBacklit	Four Nordic countries	5N20M13891	
NonBacklit	Slovenian	5N20M13926	
NonBacklit	Spanish	5N20M13936	
NonBacklit	Swiss	5N20M13862	
NonBacklit	Italian	5N20M13892	
NonBacklit	Turkish	5N20M13910	
NonBacklit	French-Arabic	5N20M13884	
NonBacklit	Japanese	5N20M13877	
NonBacklit	Ukraine	5N20M13896	
Backlit	English	5N20M13863	
Backlit	U.K. English	5N20M13928	
Backlit	International English	5N20M13908	
Backlit	Thai	5N20M13932	
Backlit	Indian	5N20M13865	

Table 4. Parts list—Keyboard (continued)

Language		P/N	CRU ID.
Backlit	Arabic	5N20M13903	
Backlit	Greek	5N20M13895	
Backlit	Hebrew	5N20M13912	
Backlit	Korean	5N20M13875	
Backlit	Russian	5N20M13852	
Backlit	Traditional Chinese	5N20M13923	
Backlit	Bulgarian	5N20M13900	
Backlit	Belgian	5N20M13913	
Backlit	Dutch	5N20M13864	
Backlit	Portuguese	5N20M13934	
Backlit	Czechoslovakian	5N20M13899	
Backlit	French	5N20M13879	*
Backlit	Canadian English&French	5N20M13909	
Backlit	German	5N20M13882	
Backlit	Hungarian	5N20M13902	
Backlit	Latin	5N20M13886	
Backlit	Four Nordic countries	5N20M13866	
Backlit	Slovenian	5N20M13859	
Backlit	Spanish	5N20M13881	
Backlit	Swiss	5N20M13929	
Backlit	Italian	5N20M13851	
Backlit	Turkish	5N20M13878	
Backlit	French-Arabic	5N20M13858	
Backlit	Ukraine	5N20M13874	

Miscellaneous parts

Table 5. Parts list—Miscellaneous parts

FRU	P/N	CRU ID.
Cable miscellaneous parts: (a) POGO Cable 3N 80U1 W/mylar (b) TP Board Cable 3N 80U1 System miscellaneous parts: (c) CAMERA Bracket 3N 80U1 **Note:** Italicized letters in parentheses are references to the exploded view in “Overall” on page 59.	 5C10M35989 5C10M13887 5B40M13897	N

Screws

Table 6. Parts list—Screws

FRU	P/N	CRU ID.
Screw Pack 3N 80U1	5S10M13890	N

Active Pen

Table 7. Parts list—Screws

FRU	P/N	CRU ID.
Wacom ESP10110C5 D9.5 BK A Pen FAP TOUCHPEN	5T70J33309	*

Notices

Lenovo may not offer the products, services, or features discussed in this document in all countries. Consult your local Lenovo representative for information on the products and services currently available in your area. Any reference to a Lenovo product, program, or service is not intended to state or imply that only that Lenovo product, program, or service may be used. Any functionally equivalent product, program, or service that does not infringe any Lenovo intellectual property right may be used instead. However, it is the user's responsibility to evaluate and verify the operation of any other product, program, or service.

Lenovo may have patents or pending patent applications covering subject matter described in this document. The furnishing of this document does not give you any license to these patents.

LENOVO GROUP LTD. PROVIDES THIS PUBLICATION "AS IS" WITHOUT WARRANTY OF ANY KIND, EITHER EXPRESS OR IMPLIED, INCLUDING, BUT NOT LIMITED TO, THE IMPLIED WARRANTIES OF NON-INFRINGEMENT, MERCHANTABILITY OR FITNESS FOR A PARTICULAR PURPOSE. Some jurisdictions do not allow disclaimer of express or implied warranties in certain transactions, therefore, this statement may not apply to you.

This information could include technical inaccuracies or typographical errors. Changes are periodically made to the information herein; these changes will be incorporated in new editions of the publication. Lenovo may make improvements and/or changes in the product(s) and/or the program(s) described in this publication at any time without notice.

The products described in this document are not intended for use in implantation or other life support applications where malfunction may result in injury or death to persons. The information contained in this document does not affect or change Lenovo product specifications or warranties. Nothing in this document shall operate as an express or implied license or indemnity under the intellectual property rights of Lenovo or third parties. All information contained in this document was obtained in specific environments and is presented as an illustration. The result obtained in other operating environments may vary.

Lenovo may use or distribute any of the information you supply in any way it believes appropriate without incurring any obligation to you.

Any references in this publication to non-Lenovo Web sites are provided for convenience only and do not in any manner serve as an endorsement of those Web sites. The materials at those Web sites are not part of the materials for this Lenovo product, and use of those Web sites is at your own risk.

Any performance data contained herein was determined in a controlled environment. Therefore, the result obtained in other operating environments may vary significantly. Some measurements may have been made on development-level systems and there is no guarantee that these measurements will be the same on generally available systems. Furthermore, some measurements may have been estimated through extrapolation. Actual results may vary. Users of this document should verify the applicable data for their specific environment.

Trademarks

The following terms are trademarks or registered trademarks of Lenovo in the United States, other countries, or both.

Lenovo
ideapad

Microsoft and Windows are trademarks of Microsoft Corporation in the United States, other countries, or both.