

CityCharm Cone

BDS491 CG25-/740 II A GR H07RN-PX1.5 60

CityCharm Cone - 15 pcs - ClearGuide 2500 lm - LED - 740 neutral white - Power supply unit regulating - 220 to 240 V - 50 to 60 Hz - Safety class II - Asymmetrical - Polycarbonate bowl/cover - Gray - Luminaire surge protection level until 6 kV differential mode and 8 kV common mode - Cable 0.2 m without plug - Spigot for diameter 60 mm

The CityCharm range is designed for use in urban areas where comfortable lighting, ambiance and design play an important role. It offers two iconic, timeless designs (Cordoba and Cone) and various accessories, enabling you to create a lighting solution that carries your signature, both by day and by night.;CityCharm provides high visual comfort while maintaining excellent performance. It offers a choice of two innovative new Philips Lighting technologies: GentleBeam, which maximizes visual comfort, or ClearGuide, which optimizes vertical illumination and visual guidance.;A variety of dedicated brackets and masts enables you to reshape your residential areas and city centers in the most elegant way imaginable.;Further information about GentleBeam and ClearGuide technology can be found in the Product Guide.

Product data

General Information	
Number of light sources	15 pcs
Lamp family code	CG25 [ClearGuide 2500 lm]
Light source color	740 neutral white
Light source replaceable	Yes
Number of gear units	1 unit
Gear	EB [Electronic]

Driver/power unit/transformer	Power supply unit regulating
Driver included	Yes
Optical cover/lens type	Polycarbonate bowl/cover
Luminaire light beam spread	360°
Control interface	-
Connection	Flying leads/wires
Cable	Cable 0.2 m without plug

CityCharm Cone

Protection class IEC	Safety class II
Glow-wire test	Temperature 650 °C, duration 5 s
Flammability mark	-
CE mark	CE mark
ENEC mark	ENEC mark
UL mark	-
Warranty period	5 years
Optic type outdoor	Asymmetrical
Remarks	* At extreme ambient temperatures the luminaire might automatically dim down to protect components
Constant light output	No
Spare parts available	Yes
Number of products on MCB of 16 A type B	32
Lifecycle services	Maintenance services
Photobiological risk	Risk group 1
Product recyclability	95%
RoHS mark	RoHS mark
WEEE mark	-
Light source engine type	LED
Accessory PFC	-
Serviceability class	Class A, luminaire is equipped with serviceable parts (when applicable): LED board, driver, control units, surge protection device, optics, front cover and mechanical parts
Product family code	BDS491 [CityCharm Cone]

Light Technical

Upward light output ratio	0.03
Scotopic/photopic lumen ratio	1.24
Initial luminous flux at 15 °C	2501 lm
Initial luminous flux at 25 °C	2501 lm
Initial luminous flux at 35 °C	2501 lm
Standard tilt angle posttop	0°
Standard tilt angle side entry	0°

Operating and Electrical

Input Voltage	220 to 240 V
Input Frequency	50 to 60 Hz
Control signal voltage	-
Inrush current	27 A
Inrush time	15 ms
Driver current	380 mA
Power Factor (Max)	0.9
Power Factor (Min)	0.8
Power Factor (Nom)	0.842

Controls and Dimming

Dimmable	No

Mechanical and Housing

Housing Material	Aluminum
Reflector material	-
Optic material	Polycarbonate
Optical cover/lens material	Polycarbonate
Fixation material	Aluminum
Mounting device	Spigot for diameter 60 mm
Optical cover/lens shape	Flat
Optical cover/lens finish	Clear
Torque	25
Overall height	529 mm
Overall diameter	556 mm
Effective projected area	0.1155 m²

Approval and Application

Ingress protection code	IP66 [Dust penetration-protected, jet-proof]
Mech. impact protection code	IK10 [20 J vandal-resistant]
Surge Protection (Common/Differential)	Luminaire surge protection level until 6 kV differential mode and 8 kV common mode

Initial Performance (IEC Compliant)

Initial luminous flux (system flux)	2140 lm
Luminous flux tolerance	+/-10%
Initial LED luminaire efficacy	107 lm/W
Init. Corr. Color Temperature	4000 K
Init. Color Rendering Index	≥70
Initial chromaticity	(0.380, 0.370) SDCM <3
Initial input power	20 W
Power consumption tolerance	+/-10%

Application Conditions

Ambient temperature range	-40 to +50 °C
Maximum dim level	Not applicable

Product Data

Full product code	871869693926000
Order product name	BDS491 CG25-/740 II A GR H07RN-PX1.5 60
EAN/UPC - Product	8718696939260
Order code	910505017431
Numerator - Quantity Per Pack	1
Numerator - Packs per outer box	1
Material Nr. (12NC)	910505017431
Net Weight (Piece)	12.000 kg

CityCharm Cone

Dimensional drawing

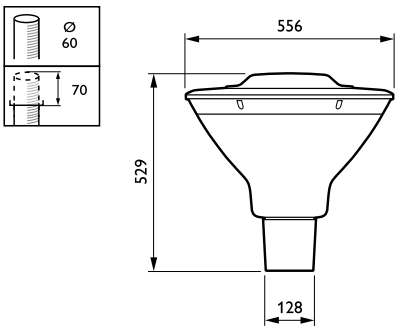

CityCharm BDS490/491

© 2019 Signify Holding All rights reserved. Signify does not give any representation or warranty as to the accuracy or completeness of the information included herein and shall not be liable for any action in reliance thereon. The information presented in this document is not intended as any commercial offer and does not form part of any quotation or contract, unless otherwise agreed by Signify. Philips and the Philips Shield Emblem are registered trademarks of Koninklijke Philips N.V.