

LuxSpace square, recessed

DN572B LED12S/830 PSE-E C WH

LuxSpace2 Square - LED Module, system flux 1200 lm - 830 warm white - Power supply unit external, DC compatible for central emergency lighting - High-gloss mirror - White

Customers are looking to optimize all their resources, and that means not just their running costs (energy, etc.) but also their human resources. Energy savings are therefore a priority, but they must not have an adverse effect on the well-being of employees, who need a pleasant environment in order to be more productive, or on customers, who want to enjoy their shopping experience. LuxSpace provides the perfect combination of efficiency, light comfort and design, without compromising on lighting performance (color rendering and color uniformity). It offers a wide choice of options for creating the desired ambience, no matter the application.

Product data

General Information	
Number of light sources	1 pc
Lamp family code	LED12S [LED Module, system flux 1200 lm]
Light source color	830 warm white
Cap-Base	- [-]
Light source replaceable	No
Number of gear units	1 unit
Gear	-
Driver/power unit/transformer	Power supply unit external, DC compatible for central emergency lighting
Driver included	Yes

Optic type	High-gloss mirror
Optical cover/lens type	-
Luminaire light beam spread	80°
Emergency lighting	-
Connection	Push-in connector and pull relief
Cable	-
Protection class IEC	Safety class II
Glow-wire test	Temperature 850 °C, duration 5 s
Flammability mark	For mounting on normally flammable surfaces
CE mark	CE mark

LuxSpace square, recessed

ENEC mark	ENEC mark
UL mark	-
Warranty period	5 years
Decorative accessories	-
Remarks	*-Per Lighting Europe guidance paper "Evaluating performance of LED based luminaires - January 2018": statistically there is no relevant difference in lumen maintenance between B50 and for example B10. Therefore the median useful life (B50) value also represents the B10 value.
Constant light output	No
Number of products on MCB of 16 A type B	32
RoHS mark	-
Product family code	DN572B [LuxSpace2 Square]

Light Technical

Optical cover/lens type accessory	-

Operating and Electrical

Input Voltage	220 to 240 V
Input Frequency	50 to 60 Hz
Inrush current	18 A
Inrush time	0.24 ms
Power Factor (Min)	0.9

Controls and Dimming

Dimmable	No

Mechanical and Housing

Housing configuration	-
Housing Material	Aluminum die-cast
Reflector material	Polycarbonate aluminum coated
Optic material	Polycarbonate
Optical cover/lens material	Glass
Fixation material	Steel
Optical cover/lens finish	Frosted
Overall length	214 mm
Overall width	214 mm
Overall height	119 mm

Approval and Application

Ingress protection code	IP20 [Finger-protected]
Mech. impact protection code	IK02 [0.2 J standard]

Initial Performance (IEC Compliant)

Initial luminous flux (system flux)	1200 lm
Luminous flux tolerance	+/-10%
Initial LED luminaire efficacy	113 lm/W
Init. Corr. Color Temperature	3000 K
Init. Color Rendering Index	>80
Initial chromaticity	(0.43, 0.40) SDCM <3
Initial input power	10.6 W
Power consumption tolerance	+/-10%

Over Time Performance (IEC Compliant)

Control gear failure rate at median useful life 50000 h	5 %
Lumen maintenance at median useful life* 50000 h	L90

Application Conditions

Ambient temperature range	+10 to +25 °C
Performance ambient temperature Tq	25 °C
Suitable for random switching	Yes (relates to presence/ movement detection and daylight harvesting)

Product Data

Full product code	871829194017300
Order product name	DN572B LED12S/830 PSE-E C WH
EAN/UPC - Product	8718291940173
Order code	910503706581
Numerator - Quantity Per Pack	1
Numerator - Packs per outer box	1
Material Nr. (12NC)	910503706581
Net Weight (Piece)	1.400 kg

LuxSpace square, recessed

Dimensional drawing

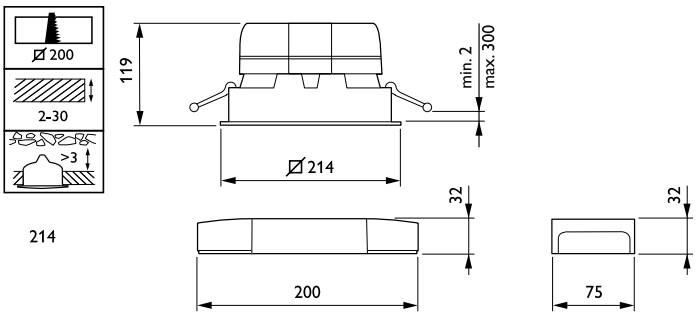

LuxSpace gen2 DN570B-DN572B

Photometric data

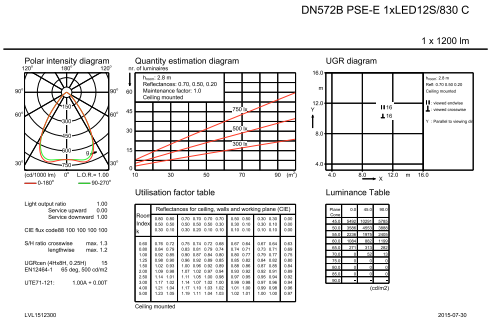

IFGU1_DN572B PSE-E 1xLED12S830 C.EPS

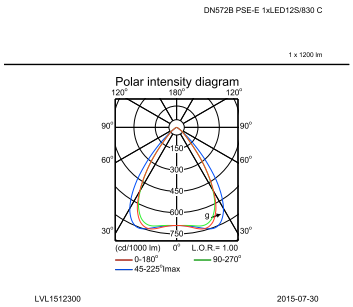

IFPC1_DN572B PSE-E 1xLED12S830 C.EPS

© 2019 Signify Holding All rights reserved. Signify does not give any representation or warranty as to the accuracy or completeness of the information included herein and shall not be liable for any action in reliance thereon. The information presented in this document is not intended as any commercial offer and does not form part of any quotation or contract, unless otherwise agreed by Signify. Philips and the Philips Shield Emblem are registered trademarks of Koninklijke Philips N.V.