

TownGuide Performer

BDP102 LED40/830 II DW PCC SI CLO-DDF1 6

TOWNGUIDE PERF CLASSIC CONE - LED module 4000 lm - Distribution wide - Polycarbonate bowl/cover clear

The TownGuide Performer family consists of six recognizable yet modern shapes: Flat Cone, Bowl, Classic Cone, Classic, T and Tzero. All are available with a clear bowl. Except for Tzero, also a frosted bowl can be chosen. With an extensive range of lumen packages and a choice of light colors and operating lifetimes, it is easy to select the version that best suits your project's specific requirements. In addition, TownGuide Performer has a variety of control system options that can make it an integral part of your smart energy-reduction programs – from stand-alone LumiStep and DynaDimmer, SDU switch-dim control, through to seamless remote connectivity with CityTouch lighting management software. Installation is easy. Thanks to the bayonet whistle connector with integrated gland located in the spigot, the luminaire does not have to be opened at all for installation. Philips has made every effort to make the Total Cost of Ownership (TCO) of the luminaire as attractive as possible. And as TownGuide Performer is a dedicated LED luminaire, compatible with a variety of control systems, the energy and maintenance cost savings compared to conventional lighting are significant.

Product data

General Information	
Number of light sources	4 [4 pcs]
Lamp family code	LED40 [LED module 4000 lm]
Light source colour	830 warm white
Light source replaceable	Yes
Number of gear units	1 unit
Driver/power unit/transformer	PSDD-CLO [Power supply unit with DynaDimmer and constant light output (integrated)]
Driver included	Yes

Optical cover/lens type	PCC [Polycarbonate bowl/cover clear]
Luminaire light beam spread	50° x 70°
Embedded control	CLO-DDF1 [Constant light output and DynaDimmer fixed presets version 1]
Control interface	-
Light regulation	Dimming via DynaDimmer integrated in ballast or driver
Cable	-
Protection class IEC	Safety class II (II)

TownGuide Performer

Parts colour	All parts colored
Coating	-
Glow-wire test	650/5 [Temperature 650 °C, duration 5 s]
Flammability mark	NO [-]
Safety device	PCBC [PCB cover]
CE mark	CE mark
ENEC mark	ENEC mark
Warranty period	5 years
Outdoor optic type	Distribution wide
Photocell	No [-]
Constant light output	Yes
Number of products on MCB	10
RoHS mark	RoHS mark
WEEE mark	-
LED engine type	LED
Product Family Code	BDP102 [TOWNGUIDE PERF CLASSIC CONE]

Light Technical

Upward light output ratio	3
Standard tilt angle post-top	0°
Standard tilt angle side entry	-

Operating and Electrical

Input voltage	220 to 240 V
Input frequency	50 to 60 Hz
Initial CLO power consumption	30.5 W
Average CLO power consumption	31 W
End CLO power consumption	32 W
Inrush current	45 A
Inrush time	0.285 ms
Power factor (min.)	0.95
Power factor (nom.)	0.81

Controls and Dimming

Dimmable	Yes

Mechanical and Housing

Housing material	Aluminum
Reflector material	-
Optic material	Acrylate
Optical cover/lens material	Polycarbonate
Fixation material	Steel
Mounting device	62P [Post-top for diameter 62 mm]
Optical cover/lens shape	Conical
Optical cover/lens finish	Clear
Torque	15
Overall height	317 mm
Overall diameter	570 mm
Effective projected area	0.088 m²

Approval and Application

Ingress protection code	IP66 [Dust penetration-protected, jet-proof]
Mech. impact protection code	IK10 [20 J vandal-resistant]

Initial Performance (IEC Compliant)

Initial luminous flux	3002 lm
Luminous flux tolerance	+/-7%
Initial LED luminaire efficacy	98 lm/W
Init. Corr. colour temperature	3000 K
Init. colour rendering index	80
Initial chromaticity	(0.43, 0.40) SDCM <5
Initial input power	32 W
Power consumption tolerance	+/-11%

Application Conditions

Ambient temperature range	-40 to +35 °C

Product Data

Full product code	871829190620900
Order product name	BDP102 LED40/830 II DW PCC SI CLO-DDF1 6
EAN/UPC – product	8718291906209
Order code	90620900
Numerator – quantity per pack	1
Numerator – packs per outer box	1
Material no. (12NC)	910500991021
Net weight (piece)	6.680 kg

TownGuide Performer

Dimensional drawing

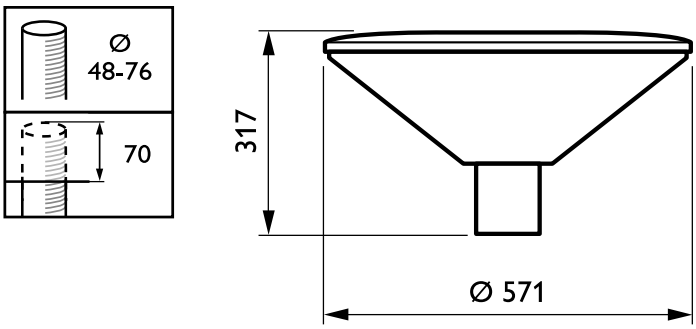

TownGuide Performer BDP100-105

© 2019 Signify Holding All rights reserved. Signify does not give any representation or warranty as to the accuracy or completeness of the information included herein and shall not be liable for any action in reliance thereon. The information presented in this document is not intended as any commercial offer and does not form part of any quotation or contract, unless otherwise agreed by Signify. Philips and the Philips Shield Emblem are registered trademarks of Koninklijke Philips N.V.