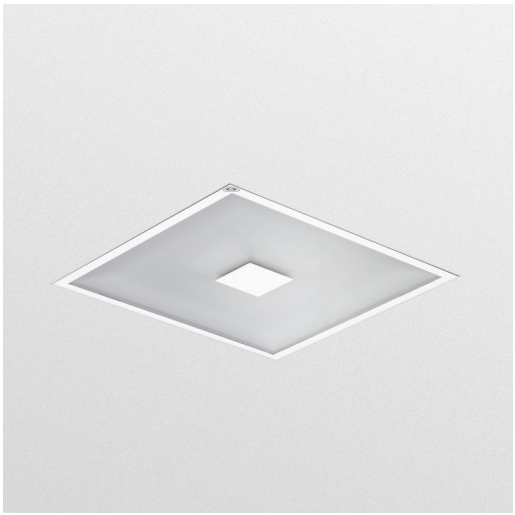

Cleanroom LED

CR434B LED88/830 PSD W60L60 AC-MLO PI

Led Cleanroom mod. 600 lay-in - LED Module 8800 lm - 830 warm white - Power supply unit with DALI interface - Width 0.60 m, length 0.60 m - Acrylate micro-lens optic - Push-in connector 3-pole

Customers operating highly hygienic facilities require special IP65, easy-to-clean, dust-free luminaires that meet all lighting requirements and norms. Moreover, to ensure the integrity of these areas (and stay within budget), they also need to minimize costly downtime and maintenance.With the latest LED engine on board, this LED cleanroom luminaire represents the ideal solution, delivering market-leading energy performance – far beyond fluorescent solutions – over 50,000 hours of maintenance-free operation. This means extremely low operational cost over the total lifetime of the luminaire, and so an excellent financial return on investment.

Product data

General Information	
Number of light sources	1 [1 pc]
Lamp family code	LED88 [LED Module 8800 lm]
Light source colour	830 warm white
Cap base	- [-]
Light source replaceable	No
Number of gear units	1 unit
Driver/power unit/transformer	PSD [Power supply unit with DALI interface]
Driver included	Yes
Optic type	No [-]
Optical cover/lens type	AC-MLO [Acrylate micro-lens optic]
Luminaire light beam spread	120°
Control interface	DALI

Connection	Push-in connector 3-pole
Cable	-
Protection class IEC	Safety class I
Mounting	Lay-in mounting
Glow-wire test	Temperature 850 °C, duration 5 s
Flammability mark	F [For mounting on normally flammable surfaces]
Safety device	No [-]
CE mark	CE mark
ENEC mark	ENEC plus mark
UL mark	No
Warranty period	5 years

Cleanroom LED

Remarks	*-Per Lighting Europe guidance paper "Evaluating performance of LED based luminaires - January 2018": statistically there is no relevant difference in lumen maintenance between B50 and for example B10. Therefore the median useful life (B50) value also represents the B10 value.
Constant light output	No
Number of products on MCB	20
RoHS mark	RoHS mark
Product Family Code	CR434B [Led Cleanroom mod. 600 lay-in]
Unified glare rating CEN	19

Operating and Electrical

Input voltage	220 to 240 V
Input frequency	50 to 60 Hz
Control signal voltage	0-16 V DC DALI
Inrush current	48 A
Inrush time	1 ms
Power factor (min.)	0.95

Controls and Dimming

Dimmable	Yes

Mechanical and Housing

Geometry	Width 0.60 m, length 0.60 m
Housing material	Steel
Reflector material	Aluminium
Optic material	-
Optical cover/lens material	Acrylate
Fixation material	-
Optical cover/lens finish	Textured
Overall length	596 mm
Overall width	596 mm
Overall height	74 mm

Approval and Application

Ingress protection code	IP65 [Dust penetration-protected, jet-proof]
Mech. impact protection code	IK05 [0.7 J]

Initial Performance (IEC Compliant)

Initial luminous flux	6000 lm
Luminous flux tolerance	+/-10%
Initial LED luminaire efficacy	109 lm/W
Init. Corr. colour temperature	3000 K
Init. colour rendering index	≥80
Initial chromaticity	(0.43, 0.40) SDCM <3
Initial input power	55 W
Power consumption tolerance	+/-10%

Over Time Performance (IEC Compliant)

Control gear failure rate at median useful life 50000 h	5 %
Lumen maintenance at median useful life* 50000 h	L80

Application Conditions

Ambient temperature range	-20 to +40 °C
Performance ambient temperature Tq	25 °C
Maximum dimming level	1%
Suitable for random switching	No

Product Data

Full product code	871794391891100
Order product name	CR434B LED88/830 PSD W60L60 AC-MLO PI
EAN/UPC – product	8717943918911
Order code	91891100
Numerator – quantity per pack	1
Numerator – packs per outer box	1
Material no. (12NC)	910501978203
Net weight (piece)	12.600 kg

Cleanroom LED

Dimensional drawing

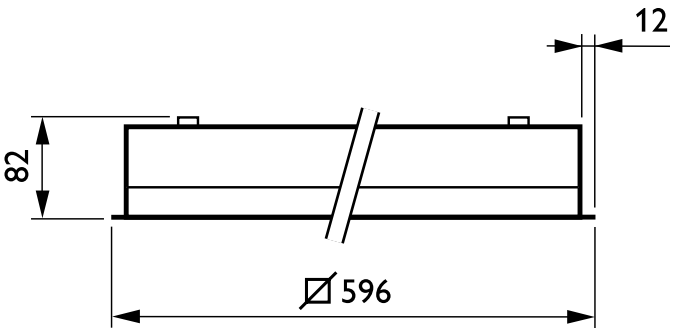

Cleanroom CR434B-CR446B

© 2019 Signify Holding All rights reserved. Signify does not give any representation or warranty as to the accuracy or completeness of the information included herein and shall not be liable for any action in reliance thereon. The information presented in this document is not intended as any commercial offer and does not form part of any quotation or contract, unless otherwise agreed by Signify. Philips and the Philips Shield Emblem are registered trademarks of Koninklijke Philips N.V.