

# TownGuide Performer

## BDP103 LED20/830 DW PCF SI CLO 62P

TOWNGUIDE PERF CLASSIC T - LED Module 2000 lm - Distribution wide - Polycarbonate bowl/cover frosted - Constant light output - Post-top for diameter 62 mm

The TownGuide Performer family consists of six recognizable yet modern shapes: Flat Cone, Bowl, Classic Cone, Classic, T and Tzero. All are available with a clear bowl. Except for Tzero, also a frosted bowl can be chosen. With an extensive range of lumen packages and a choice of light colors and operating lifetimes, it is easy to select the version that best suits your project's specific requirements. In addition, TownGuide Performer has a variety of control system options that can make it an integral part of your smart energy-reduction programs – from stand-alone LumiStep and DynaDimmer, SDU switch-dim control, through to seamless remote connectivity with CityTouch lighting management software. Installation is easy. Thanks to the bayonet whistle connector with integrated gland located in the spigot, the luminaire does not have to be opened at all for installation. Philips has made every effort to make the Total Cost of Ownership (TCO) of the luminaire as attractive as possible. And as TownGuide Performer is a dedicated LED luminaire, compatible with a variety of control systems, the energy and maintenance cost savings compared to conventional lighting are significant.

### Product data

| General Information | |
|---|---|
| **Number of light sources** | 4 [ 4 pcs] |
| **Lamp family code** | LED20 [ LED Module 2000 lm] |
| **Light source colour** | 830 warm white |
| **Light source replaceable** | Yes |
| **Number of gear units** | 1 unit |

| | |
|---|---|
| **Driver/power unit/transformer** | PSR-CLO [ Power supply unit regulating with constant light output] |
| **Driver included** | Yes |
| **Optical cover/lens type** | PCF [ Polycarbonate bowl/cover frosted] |
| **Luminaire light beam spread** | 50° x 70° |
| **Embedded control** | CLO [ Constant light output] |
| **Control interface** | - |

# TownGuide Performer

| | |
|---|---|
| **Light regulation** | - |
| **Cable** | - |
| **Protection class IEC** | Safety class I (I) |
| **Parts colour** | All parts colored |
| **Coating** | - |
| **Glow-wire test** | 650/5 [ Temperature 650 °C, duration 5 s] |
| **Flammability mark** | NO [ -] |
| **Safety device** | PCBC [ PCB cover] |
| **CE mark** | CE mark |
| **ENEC mark** | ENEC mark |
| **Warranty period** | 5 years |
| **Outdoor optic type** | Distribution wide |
| **Photocell** | No [ -] |
| **Constant light output** | Yes |
| **Number of products on MCB** | 20 |
| **RoHS mark** | RoHS mark |
| **WEEE mark** | - |
| **LED engine type** | LED |
| **Product Family Code** | BDP103 [ TOWNGUIDE PERF CLASSIC T] |

## Light Technical

| | |
|---|---|
| **Upward light output ratio** | 4 |
| **Standard tilt angle post-top** | 0° |
| **Standard tilt angle side entry** | - |

## Operating and Electrical

| | |
|---|---|
| **Input voltage** | 220 to 240 V |
| **Input frequency** | 50 to 60 Hz |
| **Initial CLO power consumption** | 15.8 W |
| **Average CLO power consumption** | 15.8 W |
| **End CLO power consumption** | 16 W |
| **Inrush current** | 22 A |
| **Inrush time** | 0.29 ms |
| **Power factor (min.)** | 0.94 |
| **Power factor (nom.)** | 0.89 |

## Controls and Dimming

| | |
|---|---|
| **Dimmable** | No |

## Mechanical and Housing

| | |
|---|---|
| **Housing material** | Aluminum |
| **Reflector material** | - |
| **Optic material** | Acrylate |
| **Optical cover/lens material** | Polycarbonate |
| **Fixation material** | Steel |
| **Mounting device** | 62P [ Post-top for diameter 62 mm] |
| **Optical cover/lens shape** | Wide |
| **Optical cover/lens finish** | Frosted |
| **Torque** | 15 |
| **Overall height** | 458 mm |
| **Overall diameter** | 570 mm |
| **Effective projected area** | 0.093 m² |

## Approval and Application

| | |
|---|---|
| **Ingress protection code** | IP66 [ Dust penetration-protected, jet-proof] |
| **Mech. impact protection code** | IK10 [ 20 J vandal-resistant] |

## Initial Performance (IEC Compliant)

| | |
|---|---|
| **Initial luminous flux** | 975 lm |
| **Luminous flux tolerance** | +/-7% |
| **Initial LED luminaire efficacy** | 63 lm/W |
| **Init. Corr. colour temperature** | 3000 K |
| **Init. colour rendering index** | 80 |
| **Initial chromaticity** | (0.43, 0.40) SDCM <5 |
| **Initial input power** | 16 W |
| **Power consumption tolerance** | +/-11% |

## Application Conditions

| | |
|---|---|
| **Ambient temperature range** | -40 to +35 °C |
| **Maximum dimming level** | Not applicable |

## Product Data

| | |
|---|---|
| **Full product code** | 871829191075600 |
| **Order product name** | BDP103 LED20/830 DW PCF SI CLO 62P |
| **EAN/UPC – product** | 8718291910756 |
| **Order code** | 91075600 |
| **Numerator – quantity per pack** | 1 |
| **Numerator – packs per outer box** | 1 |
| **Material no. (12NC)** | 910500991136 |
| **Net weight (piece)** | 7.200 kg |

# TownGuide Performer

## Dimensional drawing

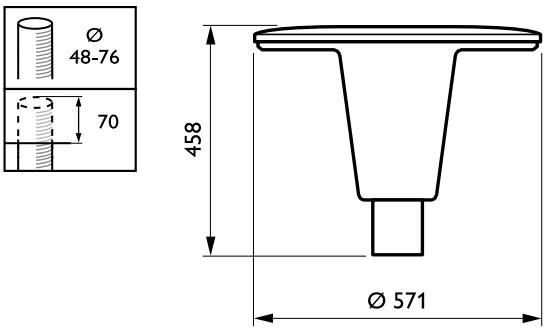


TownGuide Performer BDP100-105

## Photometric data

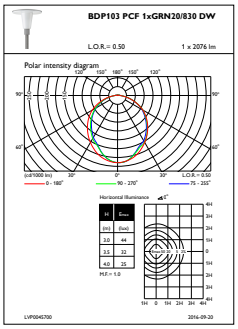


OFPL1_BDP103PCF1xGRN20830DW

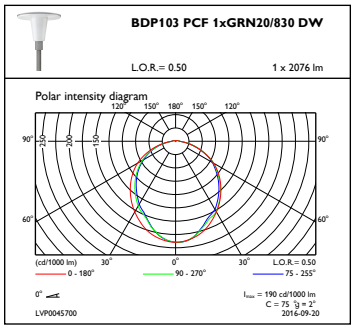


OFPC1_BDP103PCF1xGRN20830DW

© 2019 Signify Holding All rights reserved. Signify does not give any representation or warranty as to the accuracy or completeness of the information included herein and shall not be liable for any action in reliance thereon. The information presented in this document is not intended as any commercial offer and does not form part of any quotation or contract, unless otherwise agreed by Signify. Philips and the Philips Shield Emblem are registered trademarks of Koninklijke Philips N.V.