

ProAir

ST640T LED27S/930 PSU WB WH

ProAir - Generation 2 - LED Module, system flux 2700 lm - 930 warm white - Power supply unit - Wide beam - White

Store designers want a spot that fits in with their store design. Visual merchandisers need the very best light quality and spots that are easily adjustable. And maintenance managers and green champions want to reduce energy consumption and maintenance costs. ProAir offers store designers a LED spot with an elegant and compact design that they can customize to suit their needs. It gives visual merchandisers great rendering of colors and whites and excellent color consistency, as well as well-defined, clean beams for maximum impact. All versions of ProAir offer low maintenance and energy consumption.

Product data

General Information	
Number of light sources	1 pc
Lamp family code	LED27S [LED Module, system flux 2700 lm]
Beam angle of light source	120 °
Light source color	930 warm white
Light source replaceable	No
Number of gear units	1 unit
Driver/power unit/transformer	Power supply unit
Driver included	Yes
Optic type	Wide beam
Optical cover/lens type	-
Luminaire light beam spread	33°
Control interface	-
Connection	-
Cable	-

Protection class IEC	Safety class I
Mounting	-
Glow-wire test	Temperature 650 °C, duration 5 s
Flammability mark	For mounting on normally flammable surfaces
CE mark	CE mark
ENEC mark	ENEC mark
Warranty period	5 years
Glare shielding accessories	-
Remarks	*-Per Lighting Europe guidance paper "Evaluating performance of LED based luminaires - January 2018": statistically there is no relevant difference in lumen maintenance between B50 and for example B10. Therefore the median useful life (B50) value also represents the B10 value.
Constant light output	No

ProAir

Number of products on MCB of 16 A type B	34
RoHS mark	RoHS mark
Product family code	ST640T [ProAir]

Operating and Electrical

Input Voltage	220 to 240 V
Input Frequency	50 to 60 Hz
Inrush current	18 A
Inrush time	0.250 ms
Power Factor (Min)	0.9

Controls and Dimming

Dimmable	No

Mechanical and Housing

Housing Material	Aluminum
Reflector material	Polycarbonate
Optic material	Polycarbonate
Optical cover/lens material	Polymethyl methacrylate
Fixation material	-
Optical cover/lens finish	Clear
Overall length	161 mm
Overall width	100 mm
Overall height	211 mm

Approval and Application

Ingress protection code	IP20 [Finger-protected]
Mech. impact protection code	IK02 [0.2 J standard]

Initial Performance (IEC Compliant)

Initial luminous flux (system flux)	2700 lm
Luminous flux tolerance	+/-10%
Initial LED luminaire efficacy	90 lm/W
Init. Corr. Color Temperature	3000 K
Init. Color Rendering Index	≥90
Initial chromaticity	(0.43, 0.40) SDCM <3
Initial input power	30 W
Power consumption tolerance	+/-10%

Application Conditions

Ambient temperature range	+10 to +40 °C
Performance ambient temperature Tq	25 °C
Suitable for random switching	Yes (relates to presence/ movement detection and daylight harvesting)

Product Data

Full product code	871869687765400
Order product name	ST640T LED27S/930 PSU WB WH
EAN/UPC - Product	8718696877654
Order code	910500458486
Numerator - Quantity Per Pack	1
Numerator - Packs per outer box	1
Material Nr. (12NC)	910500458486
Net Weight (Piece)	1.445 kg

Dimensional drawing

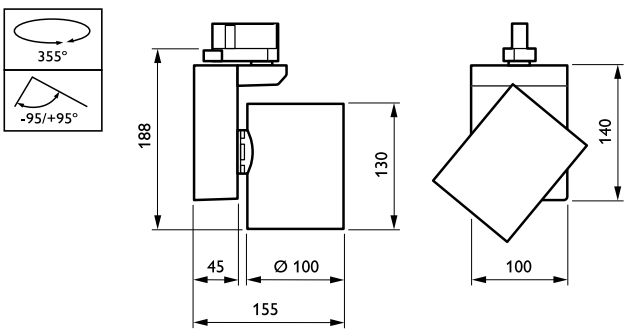

ProAir ST640T



© 2019 Signify Holding All rights reserved. Signify does not give any representation or warranty as to the accuracy or completeness of the information included herein and shall not be liable for any action in reliance thereon. The information presented in this document is not intended as any commercial offer and does not form part of any quotation or contract, unless otherwise agreed by Signify. Philips and the Philips Shield Emblem are registered trademarks of Koninklijke Philips N.V.

www.lighting.philips.com
2019, January 30 - data subject to change