

LuxSpace Accent

RS741B LED39S/827 PSE-E MB WH

LuxSpace Accent Compact G3 - LED Module, system flux 3900 lm - 827 warm white - Power supply unit external, DC compatible for central emergency lighting - Medium beam - White

Retailers are increasingly having to contend with rising energy prices. At the same time, they need to retain the quality of light they are used to, flexibility in architectural integration, and the right light effects to catch the customer's eye. Last but not least, they need future-proof solutions that will enable them to implement differentiating concepts in their store. Delivering high-quality light, punch in the beam and outstanding luminous efficacy, LuxSpace Accent is the ideal energy-efficient solution for today's demanding retail environments, covering a wide variety of lighting applications, including CrispWhite for fashion stores and Food recipes for supermarkets.

Product data

General Information	
Number of light sources	1 [1 pc]
Lamp family code	LED39S [LED Module, system flux 3900 lm]
Beam angle of light source	120 °
Light source colour	827 warm white
Light source replaceable	No
Number of gear units	1 unit
Driver/power unit/transformer	PSE-E [Power supply unit external, DC compatible for central emergency lighting]
Driver included	Yes
Optic type	MB [Medium beam]
Optical cover/lens type	No [-]

Luminaire light beam spread	30°
Control interface	-
Connection	Push-in connector and pull relief
Cable	-
Protection class IEC	Safety class II
Glow-wire test	Temperature 650 °C, duration 5 s
Flammability mark	F [For mounting on normally flammable surfaces]
CE mark	CE mark
ENEC mark	ENEC mark
UL mark	No
Warranty period	5 years

LuxSpace Accent

Remarks	*-Per Lighting Europe guidance paper "Evaluating performance of LED based luminaires - January 2018": statistically there is no relevant difference in lumen maintenance between B50 and for example B10. Therefore the median useful life (B50) value also represents the B10 value.
Constant light output	No
Number of products on MCB	32
RoHS mark	RoHS mark
Product Family Code	RS741B [LuxSpace Accent Compact G3]

Operating and Electrical

Input voltage	220 to 240 V
Input frequency	50 to 60 Hz
Initial CLO power consumption	- W
Average CLO power consumption	- W
Inrush current	14.5 A
Inrush time	0.22 ms
Power factor (min.)	0.9

Controls and Dimming

Dimmable	No

Mechanical and Housing

Housing material	Aluminium
Reflector material	Polycarbonate aluminium coated
Optic material	Polycarbonate
Optical cover/lens material	Polycarbonate
Fixation material	-
Optical cover/lens finish	Clear
Overall height	126 mm
Overall diameter	130 mm

Approval and Application

Ingress protection code	IP20 [Finger-protected]
Mech. impact protection code	IK02 [0.2 J standard]

Initial Performance (IEC Compliant)

Initial luminous flux	3900 lm
Luminous flux tolerance	+/-10%
Initial LED luminaire efficacy	120 lm/W
Init. Corr. colour temperature	2700 K
Init. colour rendering index	≥80
Initial chromaticity	(0.46, 0.41) SDCM <3
Initial input power	32.5 W
Power consumption tolerance	+/-10%

Over Time Performance (IEC Compliant)

Control gear failure rate at median useful life 50000 h	5 %
Lumen maintenance at median useful life* 50000 h	L80

Application Conditions

Ambient temperature range	+10 to +40 °C
Performance ambient temperature Tq	25 °C
Suitable for random switching	Yes (relates to presence/ movement detection and daylight harvesting)

Product Data

Full product code	871869684771800
Order product name	RS741B LED39S/827 PSE-E MB WH
EAN/UPC – product	8718696847718
Order code	84771800
Numerator – quantity per pack	1
Numerator – packs per outer box	1
Material no. (12NC)	910500457295
Net weight (piece)	0.740 kg

Dimensional drawing

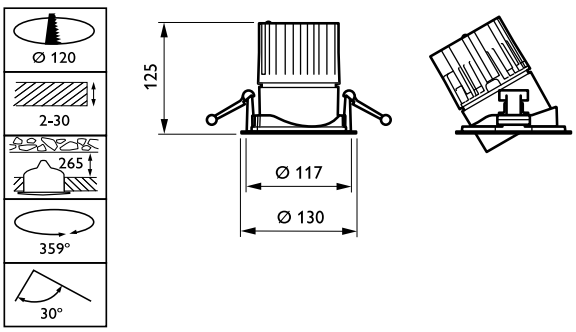

LuxSpace Accent RS730B-RS752B

LuxSpace Accent

Photometric data

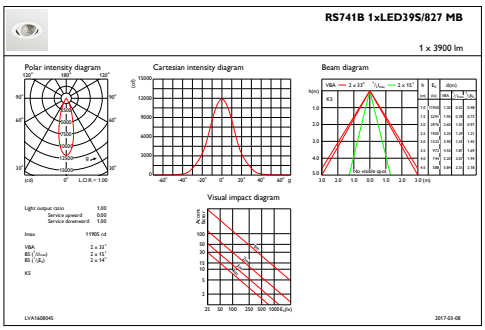

IFAS1_RS741B1xLED39S827MB

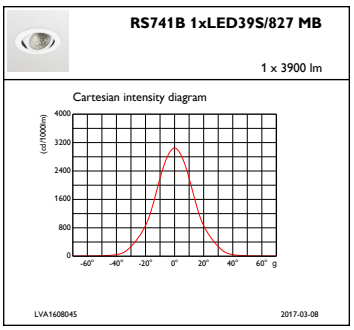

IFCC1_RS741B1xLED39S827MB

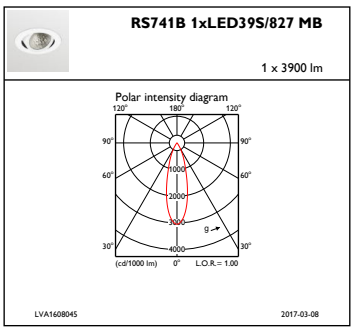

IFPC1_RS741B1xLED39S827MB

© 2019 Signify Holding All rights reserved. Signify does not give any representation or warranty as to the accuracy or completeness of the information included herein and shall not be liable for any action in reliance thereon. The information presented in this document is not intended as any commercial offer and does not form part of any quotation or contract, unless otherwise agreed by Signify. Philips and the Philips Shield Emblem are registered trademarks of Koninklijke Philips N.V.