

eW Cove MX Powercore

BCX416 10xLED-HB-3500 100-277V MB

3500 K - 50° x 70° - Medium beam - 305 mm - White

With its superior light output, wide beam angle, and range of fixed colors and color temperatures, eW Cove MX Powercore can be used for accent lighting and indirect general illumination, as well as the full range of wall and ceiling cove applications. This fixture meets or exceeds the performance of comparable linear fluorescent strip cove lights while lowering installation, energy, and maintenance costs. eW Cove MX Powercore offers environmentally conscious buyers a green, energy-efficient lighting solution without sacrificing quality or quantity of light.Integrated Powercore technology ensures rapid, efficient and accurate control of power output to the fixture directly from line voltage, eliminating the need for external power supplies. Use of standard wiring dramatically simplifies installation and helps lower total system cost.

Product data

General Information	
Number of light sources	10 [10 pcs]
Lamp family code	LED-HB [LED High Brightness]
Light source colour	Neutral white
Light source replaceable	No
Driver/power unit/transformer	PSR [Power supply unit regulating]
Driver included	Yes
Optic type	MB [Medium beam]
Optical cover/lens type	PC [Polycarbonate bowl/cover]
Luminaire light beam spread	50° x 70°
Protection class IEC	Safety class I (I)

Ready-to-install	Ready-to-install
Type description	No
CE mark	CE mark
UL mark	UL and cUL mark
CCC mark	CCC mark
FCC mark	FCC Class B

Operating and Electrical	
Input voltage	100 to 277 V
Input frequency	50 to 60 Hz

eW Cove MX Powercore

Controls and Dimming	
Dimmable	Yes

Mechanical and Housing	
Housing material	Aluminum die-cast
Optic material	Polycarbonate
Optical cover/lens material	Polycarbonate
Length	305 mm

Approval and Application	
Ingress protection code	IP20 [Finger-protected]

Initial Performance (IEC Compliant)	
Initial luminous flux	476 lm
Initial LED luminaire efficacy	40.0 lm/W
Init. Corr. colour temperature	3500 K
Init. colour rendering index	84
Initial input power	12.5 W

Over Time Performance (IEC Compliant)	
Lumen Maintenance 50% at 25°C Calculated	100000
Lumen Maintenance 50% at 25°C Reported	65000
Lumen Maintenance 50% at 50°C Calculated	100000
Lumen Maintenance 50% at 50°C Reported	65000
Lumen Maintenance 70% at 25°C Calculated	100000
Lumen Maintenance 70% at 25°C Reported	65000
Lumen Maintenance 70% at 50°C Calculated	100000
Lumen Maintenance 70% at 50°C Reported	65000

Application Conditions	
Ambient temperature range	-20 to +50 °C
Maximum dimming level	10% (depends on dimmer, ELV)
Suitable for random switching	Yes (relates to presence/ movement detection and daylight harvesting)

Product Data	
Full product code	871794379652699
Order product name	BCX416 10xLED-HB-3500 100-277V MB
EAN/UPC – product	8717943796526
Order code	79652699
Numerator – quantity per pack	1
Numerator – packs per outer box	20
Material no. (12NC)	910503700987
Net weight (piece)	0.460 kg

Dimensional drawing

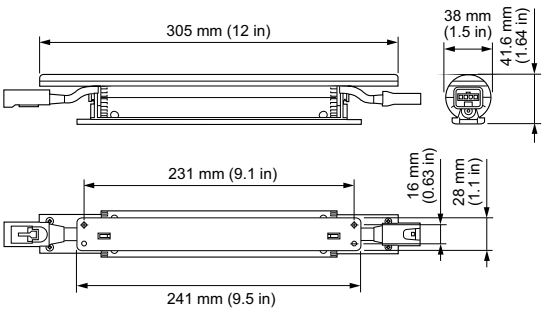

Cove

© 2019 Signify Holding All rights reserved. Signify does not give any representation or warranty as to the accuracy or completeness of the information included herein and shall not be liable for any action in reliance thereon. The information presented in this document is not intended as any commercial offer and does not form part of any quotation or contract, unless otherwise agreed by Signify. All trademarks are owned by Signify Holding or their respective owners.