

ActiLume DALI

LRI1663/00 ActiLume gen2 Multi-Sensor

The Philips ActiLume lighting control system consists of a small, lightweight sensor and controller designed for easy integration into luminaires.ActiLume is a true plug & play solution for open-plan (up to 34 luminaires) or cell offices (e.g. 4 luminaires). Used in a master-and-slave luminaire concept, easy to use and easy to install. Specific application brochures are available to help specify and apply the system in an optimal way.Commissioning is optional for all application modes. Using this method, functions can be changed without affecting the electrical installation.

Product data

Product Data	
Full product code	871829168092500
Order product name	LRI1663/00 ActiLume gen2 Multi-Sensor
EAN/UPC – product	8718291680925
Order code	68092500
Local Code	LRI1663/00

Numerator – quantity per pack	1
Numerator – packs per outer box	12
Material no. (12NC)	913700356703
Net weight (piece)	28.000 g

ActiLume DALI

Dimensional drawing

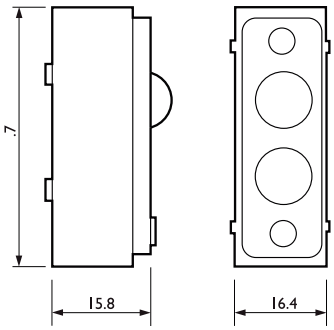

LRI1663/00 ActiLume gen2 Multi-Sensor

© 2019 Signify Holding All rights reserved. Signify does not give any representation or warranty as to the accuracy or completeness of the information included herein and shall not be liable for any action in reliance thereon. The information presented in this document is not intended as any commercial offer and does not form part of any quotation or contract, unless otherwise agreed by Signify. Philips and the Philips Shield Emblem are registered trademarks of Koninklijke Philips N.V.