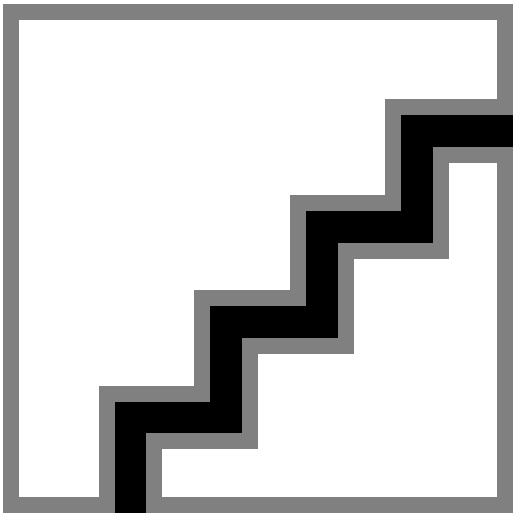

Dynalite User Interface

PADPE-SC

Regardless of the level of integration and range of available functions, a control system requires an intuitive end-user interface, so that users can easily schedule and activate the various control functionalities.Philips Dynalite user interfaces come in a broad range of panels, touchscreens and wiring devices – with a rich variety of styles and finishes to match any project budget, level of interactivity, or décor requirements.

Regardless of the level of integration and range of available functions, a control system requires an intuitive end-user interface, so that users can easily schedule and activate the various control functionalities.Philips Dynalite user interfaces come in a broad range of panels, touchscreens and wiring devices – with a rich variety of styles and finishes to match any project budget, level of interactivity, or décor requirements.

Product data

General Information	
CE mark	CE mark
Remarks	Please download the Lighting - Product Data Sheet for more information and ordering options
RoHS mark	RoHS mark
Product Family Code	YUINTF [Dynalite User interfaces]

Product Data	
Full product code	871829168560900
Order product name	PADPE-SC-X
EAN/UPC – product	8718291685609
Order code	68560900
Local Code	PADPE-SC
Numerator – quantity per pack	1
Numerator – packs per outer box	1

Dynalite User Interface

Material no. (12NC)	913703434307
Net weight (piece)	0.077 kg

Dimensional drawing

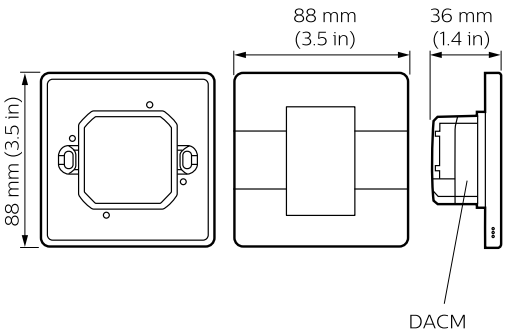

Dynalite User Interfaces

© 2018 Signify Holding All rights reserved. Signify does not give any representation or warranty as to the accuracy or completeness of the information included herein and shall not be liable for any action in reliance thereon. The information presented in this document is not intended as any commercial offer and does not form part of any quotation or contract, unless otherwise agreed by Signify. Philips and the Philips Shield Emblem are registered trademarks of Koninklijke Philips N.V.