

# ColorGraze MX4 Powercore

## BCS559 15x30 RGBW L914

15° x 30° - 914 mm

High-output luminaire for high-intensity multi-story façade and surface illumination at minimal setback; RGBW and RGBA options provide an expanded color palette and white light capability in one fixture.

### Product data

| General Information | |
|---|---|
| **Lamp family code** | LED-HB [ LED High Brightness] |
| **Light source replaceable** | No |
| **Driver included** | Yes |
| **Optical cover/lens type** | PC [ Polycarbonate bowl/cover] |
| **Luminaire light beam spread** | 15° x 30° |
| **Protection class IEC** | Safety class I (I) |
| **CE mark** | CE mark |
| **UL mark** | UL and cUL mark |
| **FCC mark** | FCC Class A |

| Operating and Electrical | |
|---|---|
| **Input voltage** | 100 to 277 V |
| **Input frequency** | 50 to 60 Hz |

| Controls and Dimming | |
|---|---|
| **Dimmable** | Yes |

| Mechanical and Housing | |
|---|---|
| **Housing material** | Aluminum extruded |
| **Optic material** | Polycarbonate |
| **Optical cover/lens material** | Polycarbonate |
| **Length** | 914 mm |

| Approval and Application | |
|---|---|
| **Ingress protection code** | IP66 [ Dust penetration-protected, jet-proof] |
| **Mech. impact protection code** | IK10 [ 20 J vandal-resistant] |
| **Vibration standard** | Not compliant to ANSI C136.31, 3G. Special orders are available to conform to the standard. Please contact your Color Kinetics Lighting Sales rep for custom configurations. |
| | Not compliant to ANSI C136.31, 3G. Special orders are available to conform to the standard. Please contact your Color Kinetics Lighting Sales rep for custom configurations. |

# ColorGraze MX4 Powercore

| Initial Performance (IEC Compliant) | |
|---|---|
| **Initial luminous flux** | 1866 lm |
| **Initial LED luminaire efficacy** | 34.4 lm/W |
| **Initial input power** | 55.5 W |

| Over Time Performance (IEC Compliant) | |
|---|---|
| **Lumen Maintenance 50% at 25°C Reported** | 75000 |
| **Lumen Maintenance 50% at 50°C Reported** | 70000 |
| **Lumen Maintenance 70% at 25°C Calculated** | 100000 |
| **Lumen Maintenance 70% at 25°C Reported** | 70000 |
| **Lumen Maintenance 70% at 50°C Calculated** | 100000 |
| **Lumen Maintenance 70% at 50°C Reported** | 65000 |

| Application Conditions | |
|---|---|
| **Ambient temperature range** | -40 to +50 °C |

| Product Data | |
|---|---|
| **Full product code** | 871829161959800 |
| **Order product name** | BCS559 15x30 RGBW L914 |
| **EAN/UPC – product** | 8718291619598 |
| **Order code** | 61959800 |
| **Numerator – quantity per pack** | 1 |
| **Numerator – packs per outer box** | 1 |
| **Material no. (12NC)** | 910503704693 |
| **Net weight (piece)** | 3.800 kg |

## Dimensional drawing

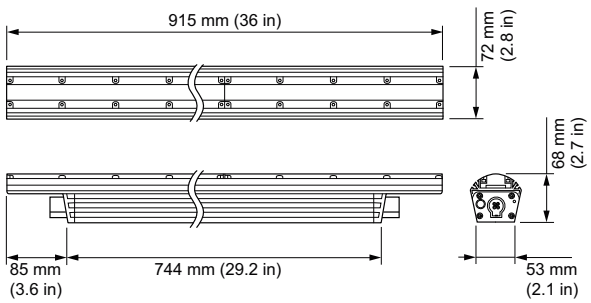


**Graze**

© 2019 Signify Holding All rights reserved. Signify does not give any representation or warranty as to the accuracy or completeness of the information included herein and shall not be liable for any action in reliance thereon. The information presented in this document is not intended as any commercial offer and does not form part of any quotation or contract, unless otherwise agreed by Signify. All trademarks are owned by Signify Holding or their respective owners.