PHILIPS

Lighting



iW Graze EC Powercore

BCS438 2700-6500 L305

Cool white and warm white - 2700 to 6500 K - 90° x 90° - Beam angle 90° - Polycarbonate bowl/cover frosted - Aluminum - 305 mm

Some exterior architectural details require a soft-edged volume fill of light. Graze EC Powercore combines this output with the proven, durable design of the Graze Powercore product family and low power consumption.

Product data

General Information	
Lamp family code	LED-HB [LED High Brightness]
Light source colour	Cool white and warm white
Light source replaceable	No
Driver included	Yes
Optic type	90 [Beam angle 90°]
Optical cover/lens type	PCF [Polycarbonate bowl/cover frosted]
Luminaire light beam spread	90° x 90°
Protection class IEC	Safety class I (I)
CE mark	CE mark
UL mark	UL and cUL mark
Lifetime to 70% luminous flux	100000 h
FCC mark	FCC Class A

Operating and Electrical	
Input voltage	100 to 277 V
Input frequency	50 to 60 Hz

Controls and Dimming	
Dimmable	Yes

Mechanical and Housing	
Housing material	Aluminum extruded
Optic material	Polycarbonate
Optical cover/lens material	Polycarbonate
Length	305 mm

Approval and Application	
Ingress protection code	IP66 [Dust penetration-protected, jet-proof]
Mech. impact protection code	IK08 [5 J vandal-protected]
Vibration standard	Complies with ANSI C136.31, 3G

iW Graze EC Powercore

	Complies with ANSI C136.31, 3G

Initial Performance (IEC Compliant)	
Initial luminous flux	412 lm
Initial LED luminaire efficacy	29.6 lm/W
Init. Corr. colour temperature	2700 to 6500 K
Init. colour rendering index	82
Initial input power	10 W

Over Time Performance (IEC Compliant)	
Lumen Maintenance 50% at 25°C Calculated	100000
Lumen Maintenance 50% at 25°C Reported	36000
Lumen Maintenance 50% at 50°C Calculated	80000
Lumen Maintenance 50% at 50°C Reported	36000
Lumen Maintenance 70% at 25°C Calculated	100000
Lumen Maintenance 70% at 25°C Reported	36000
Lumen Maintenance 70% at 50°C Calculated	60000
Lumen Maintenance 70% at 50°C Reported	36000

Application Conditions	
Ambient temperature range	-40 to +50 °C

Product Data	
Full product code	871829160989699
Order product name	BCS438 2700-6500 L305
EAN/UPC – product	8718291609896
Order code	60989699
Numerator – quantity per pack	1
Numerator – packs per outer box	4
Material no. (12NC)	910503703684
Net weight (piece)	1.200 kg

IK08

Dimensional drawing

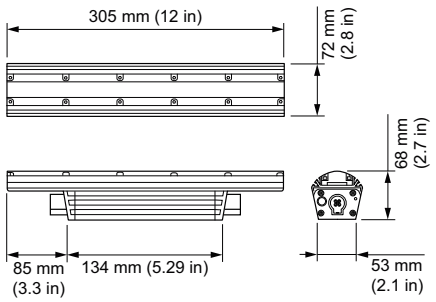

Graze

© 2019 Signify Holding All rights reserved. Signify does not give any representation or warranty as to the accuracy or completeness of the information included herein and shall not be liable for any action in reliance thereon. The information presented in this document is not intended as any commercial offer and does not form part of any quotation or contract, unless otherwise agreed by Signify. All trademarks are owned by Signify Holding or their respective owners.