

TownTune Central Post-Top

BDP260 LED14-4S/740 DW10 CLO SRTB 76P

TOWNTUNE CENTRAL POST-TOP - LED module 1400 lm - LED - 740 neutral white - Power supply unit with DALI interface and constant light output - 220 to 240 V - 50 to 60 Hz - Safety class I - Distribution wide 10 - Polycarbonate bowl/cover UV-resistant - Dark Grey - Philips standard surge protection level kV - - - Diameter 76 mm, posttop decorative

As a luminaire family prepared for existing and scalable urban spaces, TownTune offers all the recent lighting innovations in terms of performance, quality of light and connectivity. The Philips TownTune family consists of three members: a central post top, an asymmetric spigot version and a version using an extending lyre post-top bracket. Each of these three can be customised with a choice of different shapes for housing and an optional decorative ring which comes in two colours. By having these options available, you can create your very own lighting signature and give a distinctive identity to districts and cities. The luminaire family is also equipped with the QR code-based Philips Service tag, which supports installation and maintenance work and enables you to create a digital library of lighting assets and spare parts. TownTune also makes use of the Philips Ledgine optimised lighting platform, ensuring that you always have the right amount and direction of light on your street. Furthermore, thanks to being SR (System-Ready), TownTune is also future-proof and is ready to be paired with both standalone and advanced control and lighting software applications, such as Interact City.

Product data

TownTune Central Post-Top

General Information	
Lamp family code	LED14 [LED module 1400 lm]
Light source colour	740 neutral white
Light source replaceable	Yes
Number of gear units	1 unit
Driver/power unit/transformer	PSD-CLO [Power supply unit with DALI interface and constant light output]
Driver included	Yes
Optical cover/lens type	PC-UV [Polycarbonate bowl/cover UV-resistant]
Luminaire light beam spread	7° - 52° x 150°
Control interface	DALI
Connection	Internal connector
Cable	-
Protection class IEC	Safety class I
Flammability mark	F [For mounting on normally flammable surfaces]
CE mark	CE mark
ENEC mark	ENEC mark
Warranty period	5 years
Outdoor optic type	Distribution wide 10
Constant light output	Yes
Number of products on MCB	21
RoHS mark	RoHS mark
LED engine type	LED
Product Family Code	BDP260 [TOWNTUNE CENTRAL POST-TOP]

Light Technical	
Upward light output ratio	0
Standard tilt angle post-top	0°
Standard tilt angle side entry	-

Operating and Electrical	
Input voltage	220 to 240 V
Input frequency	50 to 60 Hz
Initial CLO power consumption	7 W
Average CLO power consumption	7 W
End CLO power consumption	9 W
Inrush current	22 A
Inrush time	290 ms
Power factor (min.)	0.76

Controls and Dimming	
Dimmable	Yes

Mechanical and Housing	
Housing material	Aluminium
Reflector material	Acrylate
Optic material	Polymethyl methacrylate
Optical cover/lens material	Polymethyl methacrylate
Fixation material	Aluminum
Mounting device	Diameter 76 mm, posttop decorative
Optical cover/lens shape	Flat
Optical cover/lens finish	Clear
Overall length	477 mm
Overall width	477 mm
Overall height	187 mm
Overall diameter	477 mm
Effective projected area	0.042 m²

Approval and Application	
Ingress protection code	IP66 [Dust penetration-protected, jet-proof]
Mech. impact protection code	IK10 [20 J vandal-resistant]
Surge protection (common/differential)	Philips standard surge protection level kV

Initial Performance (IEC Compliant)	
Initial luminous flux	1064 lm
Luminous flux tolerance	+/-7%
Initial LED luminaire efficacy	112 lm/W
Init. Corr. colour temperature	4000 K
Init. colour rendering index	70
Initial chromaticity	5 SDCM
Initial input power	9 W
Power consumption tolerance	+/-11%

Application Conditions	
Ambient temperature range	-40 to +50 °C
Maximum dimming level	10%

Product Data	
Full product code	871869949028700
Order product name	BDP260 LED14-4S/740 DW10 CLO SRTB 76P
EAN/UPC – product	8718699490287
Order code	49028700
Numerator – quantity per pack	1
Numerator – packs per outer box	1
Material no. (12NC)	912300024159
Net weight (piece)	6.800 kg

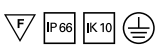

TownTune Central Post-Top

Dimensional drawing

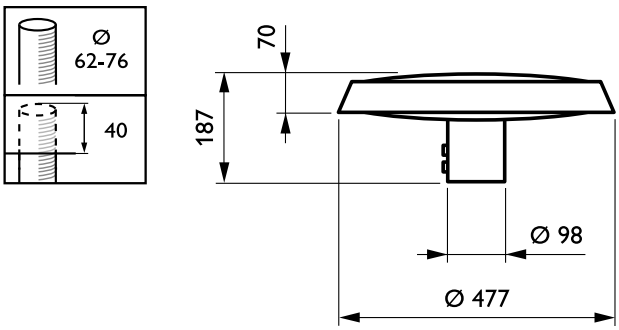

TownTune BDP260-273

© 2019 Signify Holding All rights reserved. Signify does not give any representation or warranty as to the accuracy or completeness of the information included herein and shall not be liable for any action in reliance thereon. The information presented in this document is not intended as any commercial offer and does not form part of any quotation or contract, unless otherwise agreed by Signify. Philips and the Philips Shield Emblem are registered trademarks of Koninklijke Philips N.V.