

# ColorGraze QLX Powercore

## BCS467 9 RGB L914

9° x 9° - 914 mm - aluminium

Many architectural structures need a linear fixture capable of illuminating several storeys with minimal setback and reduced power consumption. Property owners/end users need a controllable product capable of dynamic illumination to draw attention to their establishments and emphasize their brands. Graze QLX Powercore is capable of illuminating over 10 meters at very close setback distances. Powercore technology enables simple installation and long product run lengths.

### Product data

| General Information | |
|---|---|
| **Lamp family code** | LED-HB [ LED High Brightness] |
| **Light source replaceable** | No |
| **Driver included** | Yes |
| **Luminaire light beam spread** | 9° x 9° |
| **Protection class IEC** | Safety class I (I) |
| **CE mark** | CE mark |
| **UL mark** | UL and cUL mark |
| **Lifetime to 70% luminous flux** | 100000 h |

| Operating and Electrical | |
|---|---|
| **Input voltage** | 100 to 277 V |
| **Input frequency** | 50 to 60 Hz |

| Controls and Dimming | |
|---|---|
| **Dimmable** | Yes |

| Mechanical and Housing | |
|---|---|
| **Housing material** | Aluminum extruded |
| **Optic material** | Polycarbonate |
| **Optical cover/lens material** | Polycarbonate |
| **Length** | 914 mm |

| Approval and Application | |
|---|---|
| **Ingress protection code** | IP66 [ Dust penetration-protected, jet-proof] |
| **Mech. impact protection code** | IK10 [ 20 J vandal-resistant] |
| **Vibration standard** | Not compliant to ANSI C136.31, 3G. Special orders are available to conform to the standard. Please contact your Color Kinetics Lighting Sales rep for custom configurations. |

# ColorGraze QLX Powercore

| | |
|---|---|
| | Not compliant to ANSI C136.31, 3G. Special orders are available to conform to the standard. Please contact your Color Kinetics Lighting Sales rep for custom configurations. |

| Initial Performance (IEC Compliant) | |
|---|---|
| **Initial input power** | 45 W |

| Over Time Performance (IEC Compliant) | |
|---|---|
| **Lumen Maintenance 50% at 25°C Calculated** | 100000 |
| **Lumen Maintenance 50% at 25°C Reported** | 100000 |
| **Lumen Maintenance 50% at 50°C Calculated** | 80000 |
| **Lumen Maintenance 50% at 50°C Reported** | 80000 |
| **Lumen Maintenance 70% at 25°C Calculated** | 60000 |
| **Lumen Maintenance 70% at 25°C Reported** | 100000 |
| **Lumen Maintenance 70% at 50°C Calculated** | 60000 |
| **Lumen Maintenance 70% at 50°C Reported** | 91000 |

| Application Conditions | |
|---|---|
| **Ambient temperature range** | -40 to +50 °C |

| Product Data | |
|---|---|
| **Full product code** | 871829160381800 |
| **Order product name** | BCS467 9 RGB L914 |
| **EAN/UPC – product** | 8718291603818 |
| **Order code** | 60381800 |
| **Numerator – quantity per pack** | 1 |
| **Numerator – packs per outer box** | 1 |
| **Material no. (12NC)** | 910503703357 |
| **Net weight (piece)** | 3.800 kg |

## Dimensional drawing

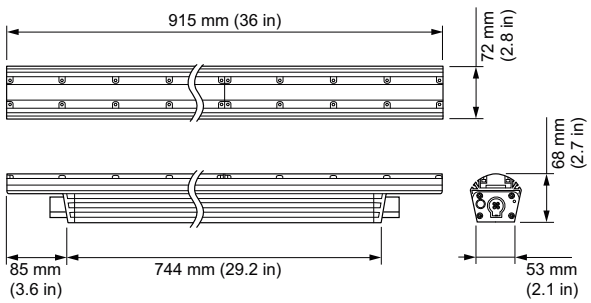


**Graze**

© 2019 Signify Holding All rights reserved. Signify does not give any representation or warranty as to the accuracy or completeness of the information included herein and shall not be liable for any action in reliance thereon. The information presented in this document is not intended as any commercial offer and does not form part of any quotation or contract, unless otherwise agreed by Signify. All trademarks are owned by Signify Holding or their respective owners.