

eColor Graze QLX Powercore

BCS447 60x30 BL L914

Blue - 60° x 30° - 914 mm - Aluminum

Many architectural structures need a linear fixture capable of illuminating several storeys with minimal setback and reduced power consumption. Property owners/end users need a controllable product capable of dynamic illumination to draw attention to their establishments and emphasize their brands. Graze QLX Powercore is capable of illuminating over 10 meters at very close setback distances. Powercore technology enables simple installation and long product run lengths.

Product data

General Information	
Lamp family code	LED-HB [LED High Brightness]
Light source colour	Blue
Light source replaceable	No
Driver included	Yes
Optical cover/lens type	PC-UV [Polycarbonate bowl/cover UV-resistant]
Luminaire light beam spread	60° x 30°
Protection class IEC	Safety class I (I)
CE mark	CE mark
UL mark	UL and cUL mark
Lifetime to 70% luminous flux	100000 h

Operating and Electrical	
Input voltage	100 to 277 V
Input frequency	50 to 60 Hz

Controls and Dimming	
Dimmable	Yes

Mechanical and Housing	
Housing material	Aluminum extruded
Optic material	Polycarbonate
Optical cover/lens material	Polycarbonate
Length	914 mm

Approval and Application	
Ingress protection code	IP66 [Dust penetration-protected, jet-proof]
Mech. impact protection code	IK10 [20 J vandal-resistant]
Vibration standard	Not compliant to ANSI C136.31, 3G. Special orders are available to conform to the standard. Please contact your Color Kinetics Lighting Sales rep for custom configurations.

eColor Graze QLX Powercore

	Not compliant to ANSI C136.31, 3G. Special orders are available to conform to the standard. Please contact your Color Kinetics Lighting Sales rep for custom configurations.

Initial Performance (IEC Compliant)	
Initial input power	42 W

Application Conditions	
Ambient temperature range	-40 to +50 °C

Product Data	
Full product code	871829160635200

Order product name	BCS447 60x30 BL L914
EAN/UPC – product	8718291606352
Order code	60635200
Numerator – quantity per pack	1
Numerator – packs per outer box	1
Material no. (12NC)	910503703528
Net weight (piece)	3.800 kg

Dimensional drawing

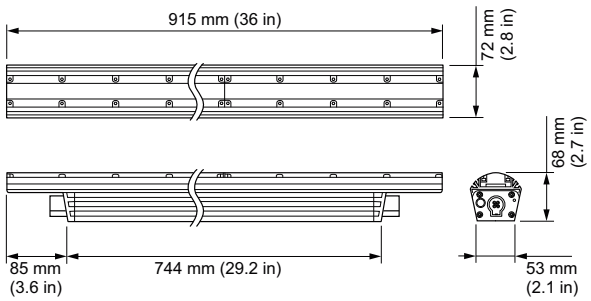

Graze

© 2019 Signify Holding All rights reserved. Signify does not give any representation or warranty as to the accuracy or completeness of the information included herein and shall not be liable for any action in reliance thereon. The information presented in this document is not intended as any commercial offer and does not form part of any quotation or contract, unless otherwise agreed by Signify. All trademarks are owned by Signify Holding or their respective owners.