

Dynalite Relay Controllers

DMRC210

2 channel compact Relay Controller

2 channel compact Relay Controller

Product data

General Information	
CE mark	CE mark
Remarks	Please download the Lighting - Product Data Sheet for more information and ordering options
RoHS mark	RoHS mark

Application Conditions	
Ambient temperature range	0 to +50 °C

Product Data	
Full product code	871016350688300

Order product name	DMRC210
EAN/UPC – product	8710163506883
Order code	50688300
Numerator – quantity per pack	1
Numerator – packs per outer box	1
Material no. (12NC)	913703050009
Net weight (piece)	0.700 kg

Dynalite Relay Controllers

Dimensional drawing

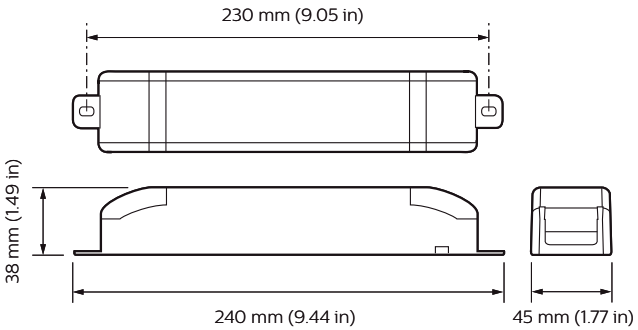

Dynalite Relay Controllers

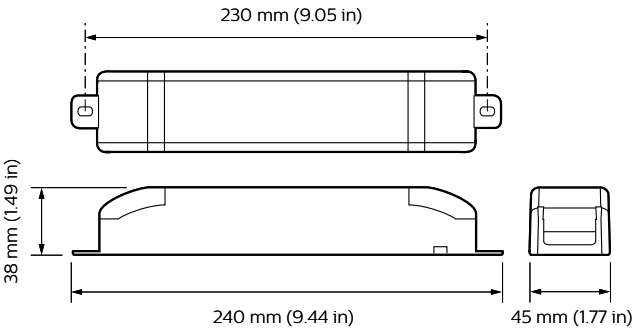

Dynalite Relay Controllers

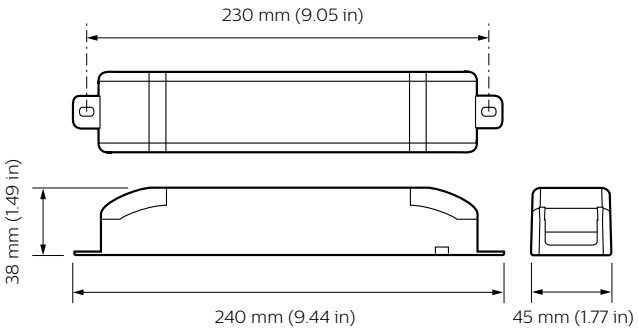

Dynalite Relay Controllers

© 2019 Signify Holding All rights reserved. Signify does not give any representation or warranty as to the accuracy or completeness of the information included herein and shall not be liable for any action in reliance thereon. The information presented in this document is not intended as any commercial offer and does not form part of any quotation or contract, unless otherwise agreed by Signify. All trademarks are owned by Signify Holding or their respective owners.