

TownTune Asymmetric DTC

BDP267 LED24-4S/740 II DM33 CLO SRT SRB

TOWNTUNE ASYMMETRIC DTC - LED Module 2400 lm - LED - 740 neutral white - 220 to 240 V - 50 or 60 Hz - Safety class II - Asymmetrical - Polycarbonate bowl/cover clear - Grey - Philips standard surge protection level kV - - - Side-entry for diameter 48-60 mm

Product data

General Information	
Lamp family code	LED24 [LED Module 2400 lm]
Light source colour	740 neutral white
Light source replaceable	Yes
Number of gear units	1 unit
Driver included	Yes
Optical cover/lens type	PCC [Polycarbonate bowl/cover clear]
Luminaire light beam spread	4° - 58° × 149°
Control interface	DALI
Connection	Internal connector
Cable	-
Protection class IEC	Safety class II
Flammability mark	F [For mounting on normally flammable surfaces]
CE mark	CE mark
ENEC mark	ENEC mark
Warranty period	2 years

Outdoor optic type	Asymmetrical
Constant light output	Yes
Number of products on MCB	6
RoHS mark	RoHS mark
LED engine type	LED
Product Family Code	BDP267 [TOWNTUNE ASYMMETRIC DTC]

Light Technical	
Upward light output ratio	0
Standard tilt angle post-top	-
Standard tilt angle side entry	0°

Operating and Electrical	
Input voltage	220 to 240 V
Input frequency	50 or 60 Hz
Initial CLO power consumption	12,8 W
Average CLO power consumption	16 W

TownTune Asymmetric DTC

End CLO power consumption	16 W
Inrush current	46 A
Inrush time	0.250 ms
Power factor (min.)	0.9

Controls and Dimming

Dimmable	Yes

Mechanical and Housing

Housing material	Aluminium die-cast
Reflector material	-
Optic material	Polymethyl methacrylate
Optical cover/lens material	Polycarbonate
Fixation material	Aluminum
Mounting device	48/60S [Side-entry for diameter 48-60 mm]
Optical cover/lens shape	Curved
Optical cover/lens finish	Clear
Overall height	70 mm
Overall diameter	477 mm
Effective projected area	0.05 m²

Approval and Application

Ingress protection code	IP66 [Dust penetration-protected, jet-proof]
Mech. impact protection code	IK09 [10 J]
Surge protection (common/differential)	Philips standard surge protection level kV

Initial Performance (IEC Compliant)

Initial luminous flux	2400 lm
Luminous flux tolerance	+/-7%
Initial LED luminaire efficacy	119 lm/W
Init. Corr. colour temperature	4000 K
Init. colour rendering index	>70
Initial chromaticity	5 SDCM
Initial input power	16 W
Power consumption tolerance	+/-11%

Application Conditions

Ambient temperature range	-40 to +50 °C
Maximum dimming level	10%

Product Data

Full product code	871869949763700
Order product name	BDP267 LED24-4S/740 II DM33 CLO SRT SRB
EAN/UPC – product	8718699497637
Order code	49763700
Numerator – quantity per pack	1
Numerator – packs per outer box	1
Material no. (12NC)	912300024204
Net weight (piece)	6.460 kg

Dimensional drawing

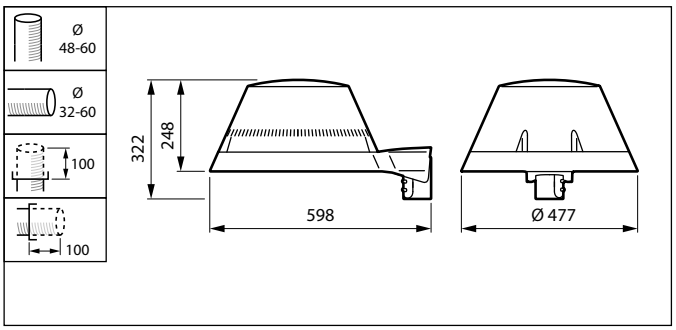

TownTune BDP260-273

TownTune Asymmetric DTC

© 2019 Signify Holding All rights reserved. Signify does not give any representation or warranty as to the accuracy or completeness of the information included herein and shall not be liable for any action in reliance thereon. The information presented in this document is not intended as any commercial offer and does not form part of any quotation or contract, unless otherwise agreed by Signify. Philips and the Philips Shield Emblem are registered trademarks of Koninklijke Philips N.V.

www.lighting.philips.com
2019, February 20 - data subject to change