PHILIPS

Lighting



ColorGraze MX Powercore

BCS459 30x60 RGB L609

30° x 60° - 609 mm

Many architectural structures need a linear fixture capable of illuminating multiple storeys with minimal setback. Property owners/end users need a controllable product capable of dynamic illumination to draw attention to their establishments and emphasize their brands. Graze MX Powercore is capable of illuminating over 20 meters at very close setback distances. Powercore technology enables simple installation and long product run lengths.

Product data

General Information	
Lamp family code	LED-HB [LED High Brightness]
Light source replaceable	No
Driver included	Yes
Luminaire light beam spread	30° x 60°
Protection class IEC	Safety class I (I)
CE mark	CE mark
UL mark	UL and cUL mark
Lifetime to 70% luminous flux	100000 h
FCC mark	FCC Class A

Operating and Electrical	
Input voltage	100 to 277 V
Input frequency	50 to 60 Hz

Controls and Dimming	
Dimmable	Yes

Mechanical and Housing	
Housing material	Aluminum extruded
Optical cover/lens material	Polycarbonate
Length	609 mm

Approval and Application	
Ingress protection code	IP66 [Dust penetration-protected, jet-proof]
Mech. impact protection code	IK10 [20 J vandal-resistant]
Vibration standard	Complies with ANSI C136.31, 3G
	Complies with ANSI C136.31, 3G

ColorGraze MX Powercore

Initial Performance (IEC Compliant)	
Initial input power	40 W

Over Time Performance (IEC Compliant)	
Lumen Maintenance 50% at 25°C Calculated	100000
Lumen Maintenance 50% at 25°C Reported	100000
Lumen Maintenance 50% at 50°C Calculated	80000
Lumen Maintenance 50% at 50°C Reported	80000
Lumen Maintenance 70% at 25°C Calculated	100000
Lumen Maintenance 70% at 25°C Reported	80000
Lumen Maintenance 70% at 50°C Calculated	91000
Lumen Maintenance 70% at 50°C Reported	60000

Application Conditions	
Ambient temperature range	-20 to +50 °C

Product Data	
Full product code	871829160401399
Order product name	BCS459 30x60 RGB L609
EAN/UPC – product	8718291604013
Order code	60401399
Numerator – quantity per pack	1
Numerator – packs per outer box	4
Material no. (12NC)	910503703337
Net weight (piece)	2.700 kg

Dimensional drawing

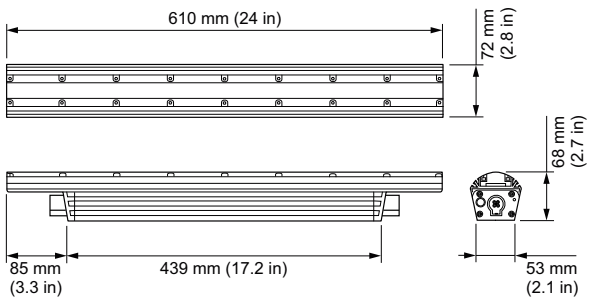

ColorGraze MX Powercore

© 2019 Signify Holding All rights reserved. Signify does not give any representation or warranty as to the accuracy or completeness of the information included herein and shall not be liable for any action in reliance thereon. The information presented in this document is not intended as any commercial offer and does not form part of any quotation or contract, unless otherwise agreed by Signify. All trademarks are owned by Signify Holding or their respective owners.