PHILIPS

Lighting



TownTune Asymmetric Lyre

BDP270 LED12-4S/740 DN10 CLO SRT SRB 62P

TOWNTUNE ASYMMETRIC LYRE - LED module 12000 lm - LED - 740 neutral white - 220 to 240 V - 50 or 60 Hz - Safety class I - Asymmetrical - Polycarbonate bowl/cover clear - Grey - Philips standard surge protection level kV - - - Post-top for diameter 60 mm

Product data

General Information	
Lamp family code	LED120 [LED module 12000 lm]
Light source colour	740 neutral white
Light source replaceable	Yes
Number of gear units	1 unit
Driver included	Yes
Optical cover/lens type	PCC [Polycarbonate bowl/cover clear]
Luminaire light beam spread	12° - 59° × 158°
Control interface	DALI
Connection	Internal connector
Cable	-
Protection class IEC	Safety class I
Flammability mark	F [For mounting on normally flammable surfaces]
CE mark	CE mark
ENEC mark	ENEC mark
Warranty period	2 years

Outdoor optic type	Asymmetrical
Constant light output	Yes
Number of products on MCB	6
RoHS mark	RoHS mark
LED engine type	LED
Product Family Code	BDP270 [TOWNTUNE ASYMMETRIC LYRE]

Light Technical	
Upward light output ratio	0
Standard tilt angle post-top	0°
Standard tilt angle side entry	-

Operating and Electrical	
Input voltage	220 to 240 V
Input frequency	50 or 60 Hz
Initial CLO power consumption	7,2 W
Average CLO power consumption	9 W

TownTune Asymmetric Lyre

End CLO power consumption	9 W
Inrush current	46 A
Inrush time	0.250 ms
Power factor (min.)	0.9

Controls and Dimming

Dimmable	Yes

Mechanical and Housing

Housing material	Aluminium die-cast
Reflector material	-
Optic material	Polymethyl methacrylate
Optical cover/lens material	Polycarbonate
Fixation material	Aluminum
Mounting device	60P [Post-top for diameter 60 mm]
Optical cover/lens shape	Curved
Optical cover/lens finish	Clear
Overall height	70 mm
Overall diameter	477 mm
Effective projected area	0.05 m²

Approval and Application

Ingress protection code	IP66 [Dust penetration-protected, jet-proof]
Mech. impact protection code	IK09 [10 J]
Surge protection (common/differential)	Philips standard surge protection level kV

Initial Performance (IEC Compliant)

Initial luminous flux	1200 lm
Luminous flux tolerance	+/-7%
Initial LED luminaire efficacy	114 lm/W
Init. Corr. colour temperature	4000 K
Init. colour rendering index	>70
Initial chromaticity	5 SDCM
Initial input power	9 W
Power consumption tolerance	+/-11%

Application Conditions

Ambient temperature range	-40 to +50 °C
Maximum dimming level	10%

Product Data

Full product code	871869949769900
Order product name	BDP270 LED12-4S/740 DN10 CLO SRT SRB 62P
EAN/UPC – product	8718699497699
Order code	49769900
Numerator – quantity per pack	1
Numerator – packs per outer box	1
Material no. (12NC)	912300024210
Net weight (piece)	9.975 kg

Dimensional drawing

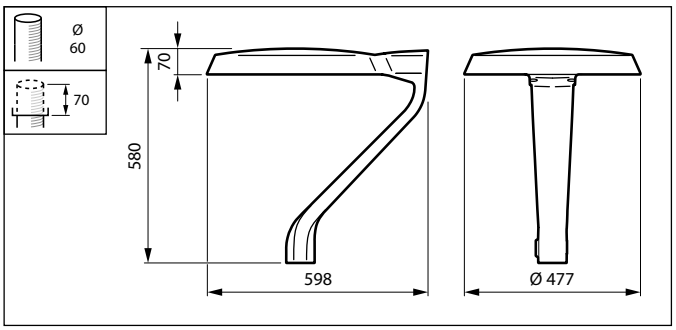

TownTune BDP260-273

TownTune Asymmetric Lyre

© 2019 Signify Holding All rights reserved. Signify does not give any representation or warranty as to the accuracy or completeness of the information included herein and shall not be liable for any action in reliance thereon. The information presented in this document is not intended as any commercial offer and does not form part of any quotation or contract, unless otherwise agreed by Signify. Philips and the Philips Shield Emblem are registered trademarks of Koninklijke Philips N.V.

www.lighting.philips.com
2019, February 20 - data subject to change