

TrueFashion

ST720T LED-XNB/PW9-3000 PSD CLM6 BK

TrueFashion Highlight - Premium white with CRI ≥90 - 3000 K - Power supply unit with DALI interface - Beam angle 6° - Black

TrueFashion is a dedicated LED spot family answering the specific needs of Fashion Retailers. These miniaturized spots with clean and fine detailing offer contemporary design and blend seamlessly into your store interior for a tailor-made look. This spot family provides the best quality of light by using innovative Philips Fashion Proof Optics (FPO). These FPO lenses offer higher intensity beams without spill light to optimize the contrast ratio and will reduce glare within the store. In addition, the specially designed Philips fashion LED flavors enhance colors and visual qualities. In this way TrueFashion ensures a superior light experience.This dedicated fashion range supports your global expansion plans by being prepared for international certifications. In addition, we offer dedicated logistics and a local presence globally.Fashion is evolving rapidly towards a new balance between online and offline shopping.TrueFashion creates an optimal shopper experience to attract and engage the shopper while bringing the connected future of lighting in the store by being ready to be connected to Interact Retail Display and Interact Retail EasyAim.

Product data

General Information	
Beam angle of light source	120 °
Light source color	Premium white with CRI ≥90
Light source replaceable	No
Number of gear units	1 unit
Driver/power unit/transformer	Power supply unit with DALI interface
Driver included	Yes
Optic type	Beam angle 6°
Luminaire light beam spread	6°
Control interface	DALI

Connection	Push-in connector and pull relief
Cable	-
Protection class IEC	Safety class II
Glow-wire test	Temperature 650 °C, duration 30 s
Flammability mark	-
CE mark	CE mark
ENEC mark	ENEC mark
Warranty period	5 years
Remarks	*-Per Lighting Europe guidance paper "Evaluating performance of LED based

	luminaires - January 2018": statistically there is no relevant difference in lumen maintenance between B50 and for example B10. Therefore the median useful life (B50) value also represents the B10 value.
Constant light output	No
Number of products on MCB of 16 A type B	34
RoHS mark	RoHS mark
Product family code	ST720T [TrueFashion Highlight]

Operating and Electrical

Input Voltage	220 to 240 V
Input Frequency	50 to 60 Hz
Inrush current	5 A
Inrush time	0.05 ms
Power Factor (Min)	0.9

Controls and Dimming

Dimmable	Yes

Mechanical and Housing

Housing Material	Aluminum
Reflector material	-
Optic material	Polycarbonate
Optical cover/lens material	Polymethyl methacrylate
Fixation material	-
Optical cover/lens finish	Clear
Overall length	220 mm
Overall width	118 mm
Overall height	280 mm

Approval and Application

Ingress protection code	IP20 [Finger-protected]
Mech. impact protection code	IK02 [0.2 J standard]

Initial Performance (IEC Compliant)

Initial luminous flux (system flux)	1150 lm
Luminous flux tolerance	+/-10%
Initial LED luminaire efficacy	60 lm/W
Init. Corr. Color Temperature	3000 K
Init. Color Rendering Index	90
Initial chromaticity	(0.42, 0.38) SDCM <3
Initial input power	19.2 W
Power consumption tolerance	+/-10%

Over Time Performance (IEC Compliant)

Control gear failure rate at median useful life 50000 h	5 %
Lumen maintenance at median useful life* 50000 h	L80

Application Conditions

Ambient temperature range	+10 to +40 °C
Performance ambient temperature Tq	25 °C
Maximum dim level	1%
Suitable for random switching	Yes (relates to presence/ movement detection and daylight harvesting)

Product Data

Full product code	871869939220800
Order product name	ST720T LED-XNB/PW9-3000 PSD CLM6 BK
EAN/UPC - Product	8718699392208
Order code	910500465165
Numerator - Quantity Per Pack	1
Numerator - Packs per outer box	1
Material Nr. (12NC)	910500465165
Net Weight (Piece)	1.585 kg

Dimensional drawing

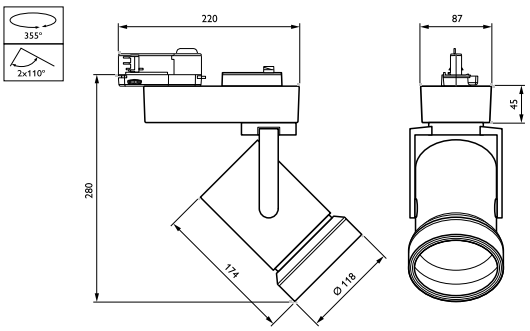

TrueFashion ST700T-ST721T



© 2019 Signify Holding All rights reserved. Signify does not give any representation or warranty as to the accuracy or completeness of the information included herein and shall not be liable for any action in reliance thereon. The information presented in this document is not intended as any commercial offer and does not form part of any quotation or contract, unless otherwise agreed by Signify. Philips and the Philips Shield Emblem are registered trademarks of Koninklijke Philips N.V.

www.lighting.philips.com
2019, March 14 - data subject to change