

TrueFashion

ST712T LED20S/PW9-3500 PSU FR12 WH

TrueFashion Compact Drv. In Track - Premium white with CRI ≥90 - 3500 K - Power supply unit - Beam angle 12° - White

TrueFashion is a dedicated LED spot family catering to the specific needs of fashion retailers. These miniaturised spots, with clean and fine detailing, offer contemporary design and blend seamlessly into your shop's interior for a tailor-made look. This spot family provides the best quality of light by using innovative lenses to optimise the contrasts within the shop. Thanks to the Philips fashion light flavours that are specifically developed to enhance colours and visual qualities, TrueFashion ensures a superior light experience. TrueFashion also supports your global expansion plans by being prepared for international certifications. In addition, we offer dedicated logistics and a local presence globally. Fashion is evolving rapidly towards a new balance between online and offline shopping. TrueFashion creates an optimal shopper experience to attract and engage the shopper, while bringing the connected future of lighting in the shop by being ready to connect to Philips fashion concepts, such as Dynamic Window and EasyAim.

Product data

General Information	
Beam angle of light source	120 °
Light source colour	Premium white with CRI ≥90
Light source replaceable	No
Number of gear units	1 unit
Driver/power unit/transformer	PSU [Power supply unit]
Driver included	Yes
Optic type	12 [Beam angle 12°]
Luminaire light beam spread	12°
Connection	Push-in connector and pull relief

Cable	-
Protection class IEC	Safety class II
Glow-wire test	Temperature 650 °C, duration 30 s
Flammability mark	NO [-]
CE mark	CE mark
ENEC mark	ENEC mark
Warranty period	5 years
Remarks	*-Per Lighting Europe guidance paper "Evaluating performance of LED based luminaires - January 2018": statistically there is no relevant difference in lumen

TrueFashion

	maintenance between B50 and for example B10. Therefore the median useful life (B50) value also represents the B10 value.
Constant light output	No
Number of products on MCB	34
RoHS mark	RoHS mark
Product Family Code	ST712T [TrueFashion Compact Drv. In Track]

Operating and Electrical

Input voltage	220 to 240 V
Input frequency	50 to 60 Hz
Inrush current	5 A
Inrush time	0.05 ms
Power factor (min.)	0.9

Controls and Dimming

Dimmable	No

Mechanical and Housing

Housing material	Aluminium
Reflector material	Polycarbonate aluminium coated
Optic material	Polycarbonate
Optical cover/lens material	Polymethyl methacrylate
Fixation material	-
Optical cover/lens finish	Clear
Overall length	162 mm
Overall width	80 mm
Overall height	168 mm

Approval and Application

Ingress protection code	IP20 [Finger-protected]
Mech. impact protection code	IK02 [0.2 J standard]

Initial Performance (IEC Compliant)

Initial luminous flux	2000 lm
Luminous flux tolerance	+/-10%
Initial LED luminaire efficacy	75 lm/W
Init. Corr. colour temperature	3500 K
Init. colour rendering index	90
Initial chromaticity	(0.39, 0.37) SDCM <3
Initial input power	26.5 W
Power consumption tolerance	+/-10%

Over Time Performance (IEC Compliant)

Control gear failure rate at median useful life 50000 h	5 %
Lumen maintenance at median useful life* 50000 h	L80

Application Conditions

Ambient temperature range	+10 to +40 °C
Performance ambient temperature Tq	25 °C
Suitable for random switching	Yes (relates to presence/ movement detection and daylight harvesting)

Product Data

Full product code	871869939911500
Order product name	ST712T LED20S/PW9-3500 PSU FR12 WH
EAN/UPC – product	8718699399115
Order code	39911500
Numerator – quantity per pack	1
Numerator – packs per outer box	1
Material no. (12NC)	910500465304
Net weight (piece)	0.610 kg

650°C 30s | IP 20 | IK 02

Dimensional drawing

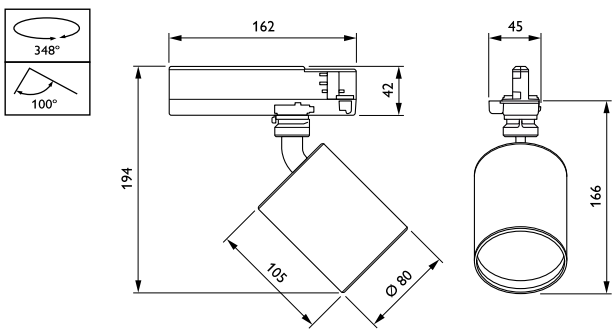

TrueFashion ST700T-ST721T



© 2019 Signify Holding All rights reserved. Signify does not give any representation or warranty as to the accuracy or completeness of the information included herein and shall not be liable for any action in reliance thereon. The information presented in this document is not intended as any commercial offer and does not form part of any quotation or contract, unless otherwise agreed by Signify. Philips and the Philips Shield Emblem are registered trademarks of Koninklijke Philips N.V.

www.lighting.philips.com
2019, January 30 - data subject to change