PHILIPS

Lighting



# CoreLine Trunking

## LL121X LED80S/840 1x PSU DA20 7 EL3 WH

CoreLine Trunking - 3 pcs - LED Module, system flux 8000 lm - Power supply unit - Double asymmetric optic 20° - - - 7 conductors - Emergency lighting 3 hours duration - Feed-through wiring 7-phase - Ceiling-mounting bracket - White - - - -

Whether for a new facility or renovation of an existing space, customers want lighting solutions that provide quality of light and substantial energy and maintenance savings. The new CoreLine Trunking range of LED products can be used to replace general lighting. The process of selecting, installing and maintaining is so easy – it's a simple switch.

### Product data

| General Information | |
|---|---|
| **Number of light sources** | 3 [ 3 pcs] |
| **Lamp family code** | LED80S [ LED Module, system flux 8000 lm] |
| **Beam angle of light source** | 120 ° |
| **Light source colour** | 840 neutral white |
| **Light source replaceable** | No |
| **Number of gear units** | 1 unit |
| **Driver/power unit/transformer** | PSU [ Power supply unit] |
| **Driver included** | Yes |
| **Optic type** | DA20 [ Double asymmetric optic 20°] |
| **Optical cover/lens type** | No [ -] |
| **Luminaire light beam spread** | 98° x 104° |
| **Emergency lighting** | EL3 [ Emergency lighting 3 hours duration] |
| **Control interface** | - |

| | |
|---|---|
| **Internal wiring** | Standard |
| **Feed-through wiring** | Feed-through wiring 7-phase |
| **Connection** | Connector with 2 additional wires for addressable emergency lighting |
| **Cable** | - |
| **Protection class IEC** | Safety class I |
| **Mounting** | SMB [ Ceiling-mounting bracket] |
| **Ready-to-install** | - |
| **Glow-wire test** | Temperature 850 °C, duration 5 s |
| **Flammability mark** | F [ For mounting on normally flammable surfaces] |
| **Accessories included** | MB-SW [ Mounting bracket for suspension wire] |
| **CE mark** | CE mark |

# CoreLine Trunking

| | |
|---|---|
| **ENEC mark** | ENEC mark |
| **Mechanical accessories** | No [ -] |
| **Remarks** | *-Per Lighting Europe guidance paper "Evaluating performance of LED based luminaires - January 2018": statistically there is no relevant difference in lumen maintenance between B50 and for example B10. Therefore the median useful life (B50) value also represents the B10 value. |
| **Constant light output** | No |
| **Number of products on MCB** | 24 |
| **RoHS mark** | RoHS mark |
| **Product Family Code** | LL121X [ CoreLine Trunking] |
| **Unified glare rating CEN** | Not applicable |

## Light Technical

| | |
|---|---|
| **Light distribution** | DIR [ Direct lighting] |

## Operating and Electrical

| | |
|---|---|
| **Input voltage** | 220 to 240 V |
| **Input frequency** | 50 to 60 Hz |
| **Control signal voltage** | 0-16 V DC DALI |
| **Circuit** | No [ -] |
| **Circuit option** | 7 [ 7 conductors] |
| **Initial CLO power consumption** | - W |
| **Average CLO power consumption** | - W |
| **Inrush current** | 19 A |
| **Inrush time** | 0.28 ms |
| **Power factor (min.)** | 0.97 |

## Controls and Dimming

| | |
|---|---|
| **Dimmable** | No |

## Mechanical and Housing

| | |
|---|---|
| **Housing material** | Steel |
| **Reflector material** | - |
| **Optic material** | Acrylate |
| **Optical cover/lens material** | Acrylate |
| **Fixation material** | Steel |
| **Optical cover/lens finish** | Frosted |
| **Overall length** | 1730 mm |
| **Overall width** | 95 mm |
| **Overall height** | 52 mm |
| **Height** | 52 mm |
| **Diameter** | - |

## Approval and Application

| | |
|---|---|
| **Ingress protection code** | IP20 [ Finger-protected] |
| **Mech. impact protection code** | IK02 [ 0.2 J standard] |

## Initial Performance (IEC Compliant)

| | |
|---|---|
| **Initial luminous flux** | 8000 lm |
| **Luminous flux tolerance** | +/-1% |
| **Initial LED luminaire efficacy** | 143 lm/W |
| **Init. Corr. colour temperature** | 4000 K |
| **Init. colour rendering index** | ≥80 |
| **Initial chromaticity** | (0.38, 0.38) SDCM <3 |
| **Initial input power** | 56 W |
| **Power consumption tolerance** | +/-10% |

## Over Time Performance (IEC Compliant)

| | |
|---|---|
| **Control gear failure rate at median useful life 50000 h** | 5 % |
| **Lumen maintenance at median useful life* 50000 h** | L80 |

## Application Conditions

| | |
|---|---|
| **Ambient temperature range** | -20 to +35 °C |
| **Performance ambient temperature Tq** | 25 °C |
| **Maximum dimming level** | Not applicable |
| **Suitable for random switching** | No |

## Product Data

| | |
|---|---|
| **Full product code** | 871869638165600 |
| **Order product name** | LL121X LED80S/840 1x PSU DA20 7 EL3 WH |
| **EAN/UPC – product** | 8718696381656 |
| **Order code** | 38165600 |
| **Numerator – quantity per pack** | 1 |
| **Numerator – packs per outer box** | 1 |
| **Material no. (12NC)** | 910925864045 |
| **Net weight (piece)** | 4.360 kg |

# CoreLine Trunking

## Dimensional drawing

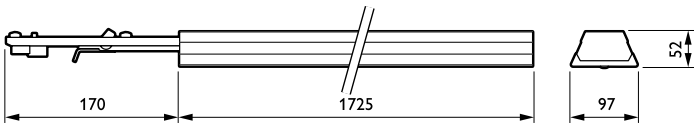


**CoreLine electr. units LL120X-LL122X**

## Photometric data

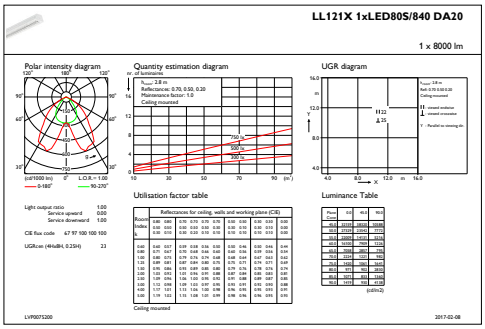


**IFGU1_LL121X1xLED80S840DA20**

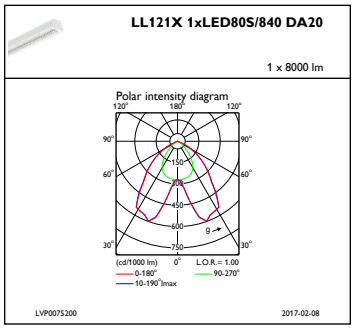


**IFPC1_LL121X1xLED80S840DA20**

© 2019 Signify Holding All rights reserved. Signify does not give any representation or warranty as to the accuracy or completeness of the information included herein and shall not be liable for any action in reliance thereon. The information presented in this document is not intended as any commercial offer and does not form part of any quotation or contract, unless otherwise agreed by Signify. Philips and the Philips Shield Emblem are registered trademarks of Koninklijke Philips N.V.