PHILIPS

Lighting



CoreLine Trunking

LL121X LED80S/840 1x PSD WB 9 EL3 WH

CoreLine Trunking - 3 pcs - LED Module, system flux 8000 lm - Power supply unit with DALI interface - Wide beam - - - 9 conductors - Emergency lighting 3 hours duration - Feed-through wiring 9-phase - Ceiling-mounting bracket - White - - - -

Whether for a new facility or renovation of an existing space, customers want lighting solutions that provide quality of light and substantial energy and maintenance savings. The new CoreLine Trunking range of LED products can be used to replace general lighting. The process of selecting, installing and maintaining is so easy – it's a simple switch.

Product data

General Information	
Number of light sources	3 [3 pcs]
Lamp family code	LED80S [LED Module, system flux 8000 lm]
Beam angle of light source	120 °
Light source colour	840 neutral white
Light source replaceable	No
Number of gear units	1 unit
Driver/power unit/transformer	PSD [Power supply unit with DALI interface]
Driver included	Yes
Optic type	WB [Wide beam]
Optical cover/lens type	No [-]
Luminaire light beam spread	100° x 94°
Emergency lighting	EL3 [Emergency lighting 3 hours duration]
Control interface	DALI

Internal wiring	Standard
Feed-through wiring	Feed-through wiring 9-phase
Connection	Connection unit 9-pole
Cable	-
Protection class IEC	Safety class I
Mounting	SMB [Ceiling-mounting bracket]
Ready-to-install	-
Glow-wire test	Temperature 850 °C, duration 5 s
Flammability mark	F [For mounting on normally flammable surfaces]
Accessories included	MB-SW [Mounting bracket for suspension wire]
CE mark	CE mark
ENEC mark	ENEC mark

CoreLine Trunking

Mechanical accessories	No [-]
Remarks	*-Per Lighting Europe guidance paper "Evaluating performance of LED based luminaires - January 2018": statistically there is no relevant difference in lumen maintenance between B50 and for example B10. Therefore the median useful life (B50) value also represents the B10 value.
Constant light output	No
Number of products on MCB	24
RoHS mark	RoHS mark
Product Family Code	LL121X [CoreLine Trunking]
Unified glare rating CEN	Not applicable

Light Technical

Light distribution	DIR [Direct lighting]

Operating and Electrical

Input voltage	220 to 240 V
Input frequency	50 to 60 Hz
Control signal voltage	0-16 V DC DALI
Circuit	No [-]
Circuit option	9 [9 conductors]
Initial CLO power consumption	- W
Average CLO power consumption	- W
Inrush current	22 A
Inrush time	0.275 ms
Power factor (min.)	0.97

Controls and Dimming

Dimmable	Yes

Mechanical and Housing

Housing material	Steel
Reflector material	-
Optic material	Acrylate
Optical cover/lens material	Acrylate
Fixation material	Steel
Optical cover/lens finish	Frosted
Overall length	1730 mm
Overall width	95 mm
Overall height	52 mm
Height	52 mm
Diameter	-

Approval and Application

Ingress protection code	IP20 [Finger-protected]
Mech. impact protection code	IK02 [0.2 J standard]

Initial Performance (IEC Compliant)

Initial luminous flux	8000 lm
Luminous flux tolerance	+/-1%
Initial LED luminaire efficacy	143 lm/W
Init. Corr. colour temperature	4000 K
Init. colour rendering index	≥80
Initial chromaticity	(0.38, 0.38) SDCM <3
Initial input power	56 W
Power consumption tolerance	+/-10%

Over Time Performance (IEC Compliant)

Control gear failure rate at median useful life 50000 h	5 %
Lumen maintenance at median useful life* 50000 h	L80

Application Conditions

Ambient temperature range	-20 to +35 °C
Performance ambient temperature Tq	25 °C
Maximum dimming level	1%
Suitable for random switching	No

Product Data

Full product code	871869638133500
Order product name	LL121X LED80S/840 1x PSD WB 9 EL3 WH
EAN/UPC – product	8718696381335
Order code	38133500
Numerator – quantity per pack	1
Numerator – packs per outer box	1
Material no. (12NC)	910925864013
Net weight (piece)	4.520 kg

CoreLine Trunking

Dimensional drawing

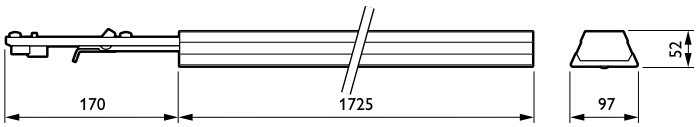

CoreLine electr. units LL120X-LL122X

Photometric data

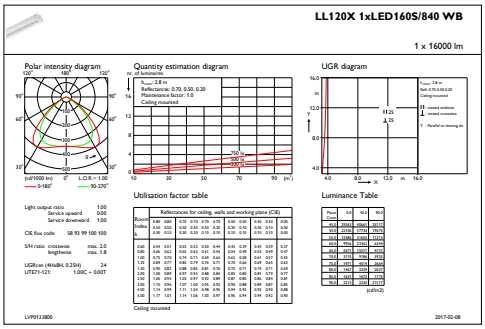

IFGU1_LL120X1xLED160S840WB

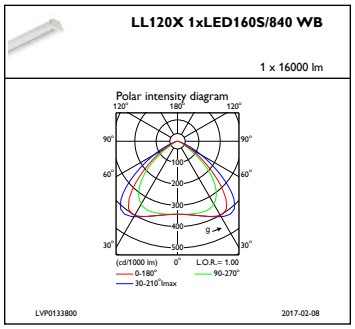

IFPC1_LL120X1xLED160S840WB

© 2019 Signify Holding All rights reserved. Signify does not give any representation or warranty as to the accuracy or completeness of the information included herein and shall not be liable for any action in reliance thereon. The information presented in this document is not intended as any commercial offer and does not form part of any quotation or contract, unless otherwise agreed by Signify. Philips and the Philips Shield Emblem are registered trademarks of Koninklijke Philips N.V.