

CoreLine Panel

RC132V LED18S/840 PSU W30L60 NOC

840 neutral white - Power supply unit

Whether for a new building or renovation of an existing space, customers want lighting solutions that provide quality of light and substantial energy and maintenance savings. The new CoreLine Panel range of LED products can be used to replace functional luminaires in general lighting applications. Both Non-Office Compliant (NOC) version and Office Compliant version (OC) are now available. The process of selecting, installing and maintaining is so easy – it's a simple switch.

Product data

General Information	
Beam angle of light source	120 °
Light source colour	840 neutral white
Light source replaceable	No
Number of gear units	1 unit
Driver/power unit/transformer	PSU [Power supply unit]
Driver included	Yes
Optic type	110 [Beam angle 110°]
Luminaire light beam spread	110° x 110°
Control interface	-
Connection	PIP [Push-in connector and pull relief]
Cable	-
Protection class IEC	Safety class II (II)
Glow-wire test	650/30 [Temperature 650 °C, duration 30 s]
Flammability mark	F [For mounting on normally flammable surfaces]
CE mark	CE mark
ENEC mark	ENEC mark
Warranty period	5 years

Remarks	*-Per Lighting Europe guidance paper "Evaluating performance of LED based luminaires - January 2018": statistically there is no relevant difference in lumen maintenance between B50 and for example B10. Therefore the median useful life (B50) value also represents the B10 value.
Constant light output	Yes
Number of products on MCB	48
RoHS mark	RoHS mark
Unified glare rating CEN	22

Operating and Electrical	
Input voltage	220 to 240 V
Input frequency	50 to 60 Hz
Average CLO power consumption	16 W
Inrush current	4 A
Inrush time	0.3 ms
Power factor (min.)	0.9

CoreLine Panel

Controls and Dimming	
Dimmable	No

Mechanical and Housing	
Housing material	Aluminum
Reflector material	-
Optic material	-
Optical cover/lens material	Polymethyl methacrylate
Fixation material	Aluminum
Optical cover/lens finish	Opal
Overall length	597 mm
Overall width	297 mm
Overall height	32 mm

Approval and Application	
Ingress protection code	IP20/44 [Finger-protected; wire-protected, splash-proof]
Mech. impact protection code	IK03 [0.3 J]

Initial Performance (IEC Compliant)	
Initial luminous flux	1800 lm
Luminous flux tolerance	+/-10%
Initial LED luminaire efficacy	110 lm/W
Init. Corr. colour temperature	4000 K
Init. colour rendering index	≥80
Initial chromaticity	(0.38, 0.38) SDCM <3
Initial input power	16 W
Power consumption tolerance	+/-10%

Over Time Performance (IEC Compliant)	
Control gear failure rate at median useful life 50000 h	5 %
Lumen maintenance at median useful life* 50000 h	L75

Application Conditions	
Ambient temperature range	+10 to +40 °C
Performance ambient temperature Tq	25 °C
Maximum dimming level	Not applicable
Suitable for random switching	Not applicable

Product Data	
Full product code	871869938096000
Order product name	RC132V LED18S/840 PSU W30L60 NOC
EAN/UPC – product	8718699380960
Order code	38096000
Numerator – quantity per pack	1
Numerator – packs per outer box	1
Material no. (12NC)	910503910308
Net weight (piece)	1.350 kg



Dimensional drawing

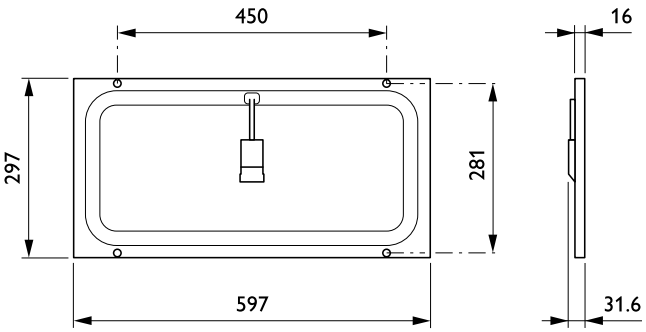

CoreLine Panel RC132V/RC133V



© 2019 Signify Holding All rights reserved. Signify does not give any representation or warranty as to the accuracy or completeness of the information included herein and shall not be liable for any action in reliance thereon. The information presented in this document is not intended as any commercial offer and does not form part of any quotation or contract, unless otherwise agreed by Signify. Philips and the Philips Shield Emblem are registered trademarks of Koninklijke Philips N.V.

www.lighting.philips.com
2019, January 15 - data subject to change