PHILIPS

Lighting



LumiStreet

BGP213 LED39-4S/740 II DM50 D9 48/60A

LumiStreet Small - LED module 3900 lm - 740 neutral white - Safety class II (II) - Distribution medium - Dimming via external communication DALI - Universal for diameter 48-60 mm adjustable

Many local authorities today have an outdated public lighting installation that urgently needs to be replaced, yet have only a limited budget available. We have the answer to their needs. With its compact design and modern LED architecture, LumiStreet is a versatile, cost-effective luminaire that fulfils basic functional road lighting requirements. It is made of high-quality components that ensure long lifetime and low maintenance cost. The result? A road lighting luminaire that provides effective illumination while at the same time cutting energy and maintenance bills.

Product data

General Information	
Number of light sources	1 [1 pc]
Lamp family code	LED39 [LED module 3900 lm]
Light source colour	740 neutral white
Light source replaceable	Yes
Number of gear units	1 unit
Driver/power unit/transformer	PSD [Power supply unit with DALI interface]
Driver included	Yes
Optical cover/lens type	FG [Flat glass]
Luminaire light beam spread	154°
Embedded control	No [-]
Control interface	DALI
Light regulation	Dimming via external communication DALI

Connection	SI [Screw connection block]
Cable	-
Protection class IEC	Safety class II (II)
Coating	-
Glow-wire test	850/5 [Temperature 850 °C, duration 5 s]
Flammability mark	NO [-]
CE mark	CE mark
ENEC mark	ENEC mark
Warranty period	5 years
Outdoor optic type	Distribution medium
Photocell	No [-]
Remarks	*-Per Lighting Europe guidance paper "Evaluating performance of LED based

	luminaires - January 2018": statistically there is no relevant difference in lumen maintenance between B50 and for example B10. Therefore the median useful life (B50) value also represents the B10 value.
Supply cable type	No [-]
Constant light output	No
Spare parts available	Yes
Number of products on MCB	20
RoHS mark	-
WEEE mark	-
LED engine type	LED
Product Family Code	BGP213 [LumiStreet Small]

Light Technical

Upward light output ratio	0
Scotopic/photopic lumen ratio	1.6
Standard tilt angle post-top	0°
Standard tilt angle side entry	0°

Operating and Electrical

Input voltage	220-240 V
Input frequency	50 to 60 Hz
Initial CLO power consumption	[DELETE] W
Average CLO power consumption	[DELETE] W
End CLO power consumption	[DELETE] W
Inrush current	22 A
Inrush time	0.29 ms
Driver current	437 mA
Power factor (min.)	0.97

Controls and Dimming

Dimmable	Yes

Mechanical and Housing

Housing material	Aluminum die-cast
Reflector material	Polycarbonate
Optic material	Polycarbonate
Optical cover/lens material	Tempered glass
Fixation material	Aluminum
Mounting device	48/60A [Universal for diameter 48-60 mm adjustable]
Optical cover/lens shape	Flat
Optical cover/lens finish	Clear
Torque	15
Overall length	630 mm
Overall width	270 mm
Overall height	98 mm
Effective projected area	0.038 m²

Approval and Application

Ingress protection code	IP66 [Dust penetration-protected, jet-proof]
Mech. impact protection code	IK08 [5 J vandal-protected]
Surge protection (common/differential)	Philips standard surge protection level kV

Initial Performance (IEC Compliant)

Initial luminous flux	3315 lm
Luminous flux tolerance	+/-7%
Initial LED luminaire efficacy	138 lm/W
Init. Corr. colour temperature	4000 K
Init. colour rendering index	70
Initial chromaticity	(0.381, 0.379) SDCM <5
Initial input power	24 W
Power consumption tolerance	+/-11%

Over Time Performance (IEC Compliant)

Control gear failure rate at median useful life 100000 h	10 %
Lumen maintenance at median useful life* 100000 h	L91

Application Conditions

Ambient temperature range	-40 to +50 °C
Performance ambient temperature Tq	25 °C
Maximum dimming level	0% (digital)

Product Data

Full product code	871869634881900
Order product name	BGP213 LED39-4S/740 II DM50 D9 48/60A
EAN/UPC – product	8718696348819
Order code	34881900
Numerator – quantity per pack	1
Numerator – packs per outer box	1
Material no. (12NC)	910925863471
Net weight (piece)	6.110 kg

LumiStreet

Dimensional drawing

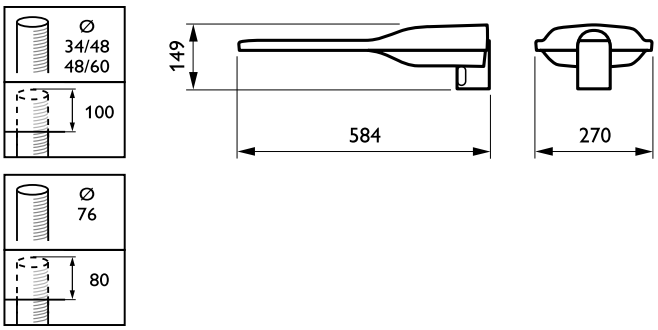

LumiStreet Small BGP/BGS212/213

Photometric data

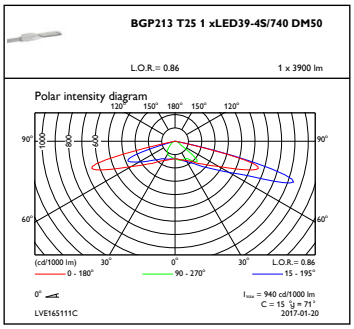

OFPC1_BGP213T251xLED39-4S740DM50

© 2019 Signify Holding All rights reserved. Signify does not give any representation or warranty as to the accuracy or completeness of the information included herein and shall not be liable for any action in reliance thereon. The information presented in this document is not intended as any commercial offer and does not form part of any quotation or contract, unless otherwise agreed by Signify. Philips and the Philips Shield Emblem are registered trademarks of Koninklijke Philips N.V.