CoreLine Panel

RC132V LED43S/840 PSU W60L60 NOC

840 neutral white - Power supply unit

Whether for a new building or renovation of an existing space, customers want lighting solutions that provide quality of light and substantial energy and maintenance savings. The new CoreLine Panel range of LED products can be used to replace functional luminaires in general lighting applications. Both Non-Office Compliant (NOC) version and Office Compliant version (OC) are now available. The process of selecting, installing and maintaining is so easy – it's a simple switch. Also available as an Interact Ready wireless CoreLine luminaire panel that works with Interact Pro lighting software and InteractReady devices to provide a connected lighting system for SMEs

Product data

General Information	
Beam angle of light source	- °
Light source colour	840 neutral white
Light source replaceable	No
Number of gear units	1 unit
Driver/power unit/transformer	PSU [Power supply unit]
Driver included	Yes
Optic type	WB [Wide beam]
Luminaire light beam spread	110°
Control interface	-
Connection	Push-in connector 3-pole
Cable	Cord 0.25 m with push-in connector
Protection class IEC	Safety class II
Glow-wire test	Temperature 650 °C, duration 30 s
Flammability mark	F [For mounting on normally flammable surfaces]

CE mark	CE mark
ENEC mark	ENEC mark
Warranty period	5 years
Constant light output	No
Number of products on MCB	24
RoHS mark	RoHS mark
Unified glare rating CEN	22

Operating and Electrical	
Input voltage	220/240 V
Input frequency	50 to 60 Hz
Initial CLO power consumption	- W
Average CLO power consumption	- W
Inrush current	11.8 A
Inrush time	300 ms

CoreLine Panel

Power factor (min.)	0.9

Controls and Dimming

Dimmable	No

Mechanical and Housing

Housing material	Aluminium
Reflector material	-
Optic material	Polymethyl methacrylate
Optical cover/lens material	Polycarbonate
Fixation material	-
Optical cover/lens finish	Opal
Overall length	597 mm
Overall width	597 mm
Overall height	36 mm

Approval and Application

Ingress protection code	IP20/44 [Finger-protected; wire-protected, splash-proof]
Mech. impact protection code	IK02 [0.2 J standard]

Initial Performance (IEC Compliant)

Initial luminous flux	4300 lm
Luminous flux tolerance	+/-10%
Initial LED luminaire efficacy	123 lm/W
Init. Corr. colour temperature	4000 K
Init. colour rendering index	>80
Initial chromaticity	(0.3818, 0.3796) SDCM<3

Initial input power	35 W
Power consumption tolerance	+/-10%

Over Time Performance (IEC Compliant)

Control gear failure rate at median useful life 50000 h	5 %
Lumen maintenance at median useful life* 50000 h	L75

Application Conditions

Ambient temperature range	+10 to +40 °C
Performance ambient temperature Tq	25 °C
Maximum dimming level	Not applicable
Suitable for random switching	Yes (relates to presence/ movement detection and daylight harvesting)

Product Data

Full product code	871016333466000
Order product name	RC132V LED43S/840 PSU W60L60 NOC
EAN/UPC – product	8710163334660
Order code	33466000
Numerator – quantity per pack	1
Numerator – packs per outer box	1
Material no. (12NC)	911401735502
Net weight (piece)	3.620 kg



Dimensional drawing

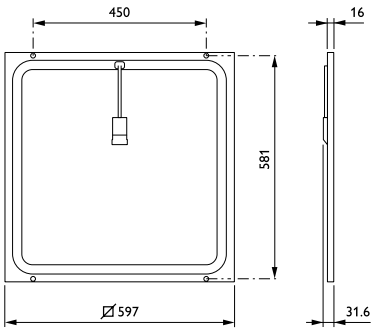

CoreLine Panel RC132V/RC133V



© 2019 Signify Holding All rights reserved. Signify does not give any representation or warranty as to the accuracy or completeness of the information included herein and shall not be liable for any action in reliance thereon. The information presented in this document is not intended as any commercial offer and does not form part of any quotation or contract, unless otherwise agreed by Signify. Philips and the Philips Shield Emblem are registered trademarks of Koninklijke Philips N.V.

www.lighting.philips.com
2019, February 15 - data subject to change