PHILIPS

Lighting



Ledinaire floodlight

BVP154 LED10/830 PSU 10W VWB MDU CE

LED Module 1000 lm - 830 warm white - Power supply unit - Very wide beam angle 100°

The Ledinaire range contains a selection of popular off-the-shelf LED luminaires that comes with the Philips high quality levels at a competitive price. Reliable, energy-efficient and affordable – just what you need.

Product data

General Information	
Lamp family code	LED10 [LED Module 1000 lm]
Light source color	830 warm white
Light source replaceable	No
Number of gear units	-
Driver/power unit/transformer	Power supply unit
Driver included	Yes
Optical cover/lens type	Clear glass
Luminaire light beam spread	100°
Control interface	-
Connection	Flying leads/wires
Cable	Cable 1.0 m without plug
Protection class IEC	Safety class I
Flammability mark	-
CE mark	CE mark
ENEC mark	-
Warranty period	3 years
Optic type outdoor	Very wide beam angle 100°
Constant light output	No
Number of products on MCB of 16 A type B	220
RoHS mark	RoHS mark
Light source engine type	LED

Light Technical	
Upward light output ratio	0
Standard tilt angle posttop	0°
Standard tilt angle side entry	0°

Operating and Electrical	
Input Voltage	220 to 240 V
Input Frequency	50 or 60 Hz
Initial CLO power consumption	- W
Average CLO power consumption	- W
End CLO power consumption	- W
Inrush current	0.54 A
Inrush time	0.0054 ms
Power Factor (Min)	0.7

Ledinaire floodlight

Controls and Dimming	
Dimmable	Yes

Mechanical and Housing	
Housing Material	Aluminum die-cast
Reflector material	Polycarbonate
Optic material	Polycarbonate
Optical cover/lens material	Glass
Fixation material	Steel
Mounting device	Mounting bracket adjustable
Optical cover/lens shape	Flat
Optical cover/lens finish	Clear
Overall length	150 mm
Overall width	35 mm
Overall height	160 mm
Effective projected area	0.018 m²

Approval and Application	
Ingress protection code	IP65 [Dust penetration-protected, jet-proof]
Mech. impact protection code	IK07 [2 J reinforced]
Surge Protection (Common/Differential)	Surge protection level until 2 kV

Initial Performance (IEC Compliant)	
Initial luminous flux (system flux)	1000 lm
Luminous flux tolerance	+/-10%
Initial LED luminaire efficacy	100 lm/W
Init. Corr. Color Temperature	3000 K
Init. Color Rendering Index	80
Initial chromaticity	<7 SDCM
Initial input power	10 W
Power consumption tolerance	+/-10%

Application Conditions	
Ambient temperature range	-25 to +40 °C
Maximum dim level	Not applicable

Product Data	
Full product code	871016333131799
Order product name	BVP154 LED10/830 PSU 10W VWB MDU CE
EAN/UPC - Product	8710163331317
Order code	911401733332
Numerator - Quantity Per Pack	1
Numerator - Packs per outer box	18
Material Nr. (12NC)	911401733332
Net Weight (Piece)	0.370 kg

IP65 IK07

Dimensional drawing

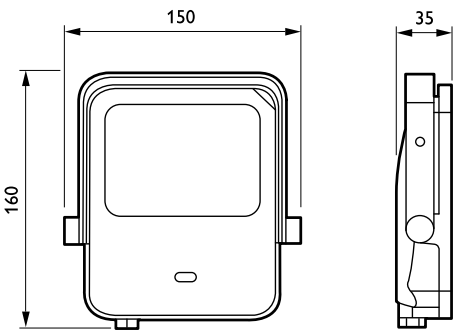

Ledinaire floodlight BVP105/106

Ledinaire floodlight

© 2019 Signify Holding All rights reserved. Signify does not give any representation or warranty as to the accuracy or completeness of the information included herein and shall not be liable for any action in reliance thereon. The information presented in this document is not intended as any commercial offer and does not form part of any quotation or contract, unless otherwise agreed by Signify. Philips and the Philips Shield Emblem are registered trademarks of Koninklijke Philips N.V.

www.lighting.philips.com
2019, February 21 - data subject to change